TECHNICAL CATALOGUE

HOME LIFTY SYSTEM
180÷500 KG

1 0991 496 EN

INDICE

0 GENERAL SECTION 6
0.1 THE HOME LIFTY SYSTEM 6
0.1.1 THE CERTIFICATES 6
0.1.2 MAIN STANDARDS AND LAWS 6
0.1.2.1 THE EN 81-41 STANDARD 6
0.1.2.2 THE EN 81-70 STANDARD 6
0.1.3 LOCAL STANDARDS AND LAWS : ITALY 7
0.1.3.1 LAW 13 - 09/01/1989 E DM 236 - 14/06/1989 7
0.1.3.2 LAW 6 - 20/02/1989 - LOMBARDY 7
0.2 RULES REFERENCE 7
0.3 TECHNICAL SPECIFICATIONS 8
0.4 MAIN STANDARD PARTS AND OPTIONS 10
1 MECHANICAL PART 14
1.1 GUIDES 14
1.2 FIXING GUIDES 14
1.2.1 BRACKETS 14
1.2.2 COUNTERBRACKETS 14
1.3 ROPES 15
2 HYDRAULIC SYSTEM 16
2.1 POWER UNITS 16
2.1.1 POWER UNIT TYPE HL DRY 16
2.1.2 POWER UNIT TYPE HL50 DRY 17
2.2 RUPTURE VALVE VC3006/B ¾” 18
2.3 JACKS 18
2.3.1 PIPES 19
2.3.1.1 HOSES 19
2.3.1.2 BRAKETS TO FIX HOSES 19
2.3.2 FLUIDS 19
2.4 CABINETS 20
2.4.1 CABINET TYPE EASY 20
3 CAR FRAMES 22
3.1 MODEL T509 2:1 22
3.1.1 MODEL T501R 2:1 23
4 CARS 24
4.1.1 DIMENSIONS 24
4.1.2 DIMENSIONS ACCORDING TO THE MACHINERY DIRECTIVE 2006/42/EC 24
4.1.3 DIMENSIONS ACCORDING TO THE UNI EN 81-41 - PRIVATE BUILDINGS 24
4.1.3.1 LONE USER EITHER STANDING OR IN A TYPE A WHEELCHAIR 24
4.1.3.2 USER IN A TYPE A OR B WHEELCHAIR WITH AN ATTENDANT 24
4.1.4 DIMENSIONS ACCORDING TO THE UNI EN 81-41 - PUBLIC BUILDINGS 24
4.1.4.1 USER IN A TYPE A OR B WHEELCHAIR WITH AN ATTENDANT* 24
4.1.5 TYPES OF ENTRANCES 25
4.2 CAR FINISHES 25
4.2.1 WALLS 25
4.2.1.1 PLASTIC LAMINATE 25
4.2.1.2 SKINPLATE 25
4.2.1.3 STAINLESS STEEL 25
4.2.1.4 GLASS 25
4.2.2 FLOORS 26
4.2.2.1 VINYL LINOLEUM 26
4.2.2.2 STUD RUBBER 26
4.2.2.3 OTHER 26
4.2.3 ENTRANCES 26
4.2.4 ILLUMINAZIONI 26
4.2.5 ACCESSORIES 26
5 OPERATORS AND DOORS 28
5.1 CAR DOORS FINISHES 28
5.1.1 AUTOMATIC DOORS 2AT, 2AO, 3AT 28
5.1.1.1 PLASTIC LAMINATE* 28
5.1.1.2 SKINPLATE 28
5.1.1.3 STAINLESS STEEL 28
5.1.1.4 GLASS 28
5.1.2 AUTOMATIC FOLDING DOORS 28
5.1.2.1 STAINLESS STEEL 28
5.1.3 AVAILABLE FINISHES 29
5.1.3.1 AUTOMATIC DOORS 29
5.1.3.2 MATCHING FINISHES OF CAR DOORS - FINISHES OF CAR AND ENTRANCES 29
5.2 LANDING DOOR FINISHES 30
5.2.1 AUTOMATIC DOORS 2AT, 2AO, 3AT 30

5.2.1.1 Polimod 30
5.2.1.2 Stainless steel 30
5.2.1.3 Glass 30
5.2.2 manual and automatic Hinged doors 1BT 30
5.2.2.1 Ral painted 30
5.2.3 Available finishes 31
5.2.3.1 Manual doors 31
5.2.3.2 Automatic doors 31
5.3 Matching car doors - landing doors 31
5.4 Locks for hinghed doors 31
5.5 Car doors technical specifications 32
5.5.1 Telescopic operator and car doors 32
5.5.1.1 Operator and door 2AT sill 90 32
5.5.1.2 Operator and door 2AT sill 70 33
5.5.1.3 Operator and door 3AT sill 105 34
5.5.2 Central operator and car door 35
5.5.2.1 Operator and door 2AO sill 75 35
5.5.3 Folding operator and car door 36
5.5.3.1 Door with or without windows 36
5.5.3.2 Panoramic door 37
5.6 Landing doors technical specifications 38
5.6.1 Standard telescopic doors 38
5.6.1.1 Door 2AT sill 90 38
5.6.1.2 Doors 2AT sill 70 39
5.6.1.3 Doors 3AT sill 105 40
5.6.2 Standard central doors 41
5.6.2.1 Doors 2AO sill 75 41
5.6.3 Hinged doors 42
5.6.3.1 doors 1BM Manual with or without windows 42
5.6.3.2 Doors 1BM manual panoramic 43
5.6.3.3 Doors 1BA automated 43
5.6.4 Firerated telescopic doors EN 81-58 - 2AT sill 90 44
5.6.4.1 Doors E 120 44
5.6.4.2 Doors EI 30 45
5.6.4.3 Doors EI 60, EI 90, EI 120 46
5.7 Firerated doors "France" - 2AT sill 90 47
5.7.1.1 Doors E 60 47
6 ELECTRICAL 48
6.1 Main electrical lines 48
6.1.1 Main options 48
6.2 Push-button panels 49
6.2.1 Car operation panel 49
6.2.1.1 Model 49
6.2.1.2 Main Car operation panel 49
6.2.1.3 Secondary Car operation panel 49
6.2.2 Landing push-button panels 50
6.2.2.1 Main floor 50
6.2.2.2 Other floors 50
6.2.2.3 Holes and box to be walled 51
6.2.3 Display in separated plate 51
6.3 Device to ask help 51
6.4 CAbinet for control panel 51
7 SAFETY DEVICES 52
7.1 Safety device in pit 52
8 DIMENSIONING OF TH SYSTEM 54
8.1 Flow calculation 54
8.1.1 Calculation of the max suspended load 54
8.1.1.1 Calculation of the car weight - P_C 54
8.1.1.2 Rated load - Q 54
8.1.1.3 Car doors - P_{CD} 55
8.1.1.4 Car frame - P_A 55
8.1.2 components Selection 56
8.1.2.1 Components in function of travel and maximum suspended load 56
8.1.3 Fixing maximum distances 58
8.1.3.1 Guides T82/B 58
8.1.3.2 Guides T90/B 58
9 SHAFT LAYOUT - MINIMUM DIMENSIONS 60
9.1 Systems with 1 entrance 60
9.1.1 Doors 2At in car and at landings 60
9.1.2 Doors 3At in car and at landings 61
9.1.3 Doors 2AO in car and at landings 62
9.1.4 Folding doors in car and hinghed doors at landings 63
9.1.5 No doors in car and hinghed doors at landings 64
9.2 Systems with 2 entrances 180° 65

 © 05.06.2013 – Rev.:05.06.2013.09.15 (J2)

9.2.1 Doors 2At in car and at landings 65
9.2.2 Doors 3At in car and at landings 66
9.2.3 Doors 2AO in car and at landings 67
9.2.4 Folding doors in car and hinghed doors at landings 68
9.2.5 No doors in car and hinghed doors at landings 69
9.3 Systems with 2 entrance 90° 70
9.3.1 Doors 2At in car and at landings 70
9.3.2 Folding doors in car and hinghed doors at landings 71
9.3.3 No doors in car and hinghed doors at landings 72
9.4 Systems with 1 entrance and mechanical part on rear 73
9.4.1 Doors 2At in car and at landings 73
9.4.2 Folding doors in car and hinghed doors at landings 74
9.4.3 No doors in car and hinghed doors at landings 75

Simbols Used

◆ Available

● Standard

○ Optional

⊘ Not Available

Attention

Informations

ENG

All rights reserved.
Any kind of exploitation in any form and by any means is forbidden without a written permission of **GMV Spa**.
GMV Spa, within technical or manufacturing progress, reserves the right to modify parts or this manual without notice.
Drawings, descriptions and data included in this manual are indicatives.
For all the data not included in this manual refer to the documents of any single part.
To guarantee the products security, do not use spare parts not genuine or not approved by **GMV Spa**.
GMV Spa will not assume any responsibility if the instructions included in this manual are not observed.

DT 05/06/2013 CR 05/06/2013 GF 05/06/2013

Information and support:

FLUID DYNAMICS EQUIPMENTS
AND COMPONENTS FOR LIFTS

UNI EN ISO 9001
Certified Company

GMV SPA

Via Don Gnocchi, 10 - 20016 PERO – Milano (Italy)
TEL. +39 02 33930.1 - FAX +39 02 3390379
http://www.gmv.it - e-mail: info@gmv.it

Please visit **www.gmv.it** to check for
updates of this document or further information about GMV products

© 05.06.2013 – Rev.:05.06.2013.09.15 (J2)

0 GENERAL SECTION

0.1 THE HOME LIFTY SYSTEM

The **Home Lifty** system is a lifting platform, with indirect action (2:1), hydraulic traction, machinery located outside the shaft and a car equipped with telescopic or folding automatic doors, or supplied without doors.

At floor there is the possibility of using automatic telescopic doors, hinged doors or automatic hinged doors.

The control valve may be of the traditional type (3010) or with a double closure, realized adding a valve (DLV) with the 3010 valve, or built-in with the NGV electronic valve.

The rated speed is limited to 0.15 m/s as required by the Machinery Directive 2006/42/EC, but for markets where this directive does not apply and on request, you can have the system with higher speeds (usually 0.3 or 0.4 m/s).

We have foreseen to provide cars with the same dimensions with different possibilities of rated load, to reduce, when possible, the installed power and also the cost of the system itself.

The system can also be supplied only with the locks for hinged landing doors.

In this case, the customer assumes the obligation to construct such landing doors comply with the requirements of section 7 of EN 81-2 and suitable operate with the locks provided.

The control panel is by microprocessor, with serial communication to reduce the number of wires between push-button panels, shaft lines and the control panel itself.

0.1.1 THE CERTIFICATES

The type-examination certificate of the system, TUV (EN 0948 10 MAC 0018 B), shall ensure compliance with all health and safety requirements of the Machinery Directive 2006/42/EC.

In Italy, according to the circular of the Ministry of industry April 14, 1997 n. 157296, for this type of systems, it's not required the inspection at starting, but you must enter into a maintenance contract and it's compulsory the inspection every two years by a notified body.

The minimum possible travel, as required by the Directive, it is 3 meters.

For shorter travels and in any case not less than 500 mm, the system is no longer within the list of machinery listed in Annex IV of the 2006/42/EC, and thus the feasibility must be evaluated each time. In this case, the certificate is no longer applicable and the Directive requires that for each machine must be prepared a specific technical file that must be available to the authorities for any control and an EC declaration of conformity must be issued.

0.1.2 MAIN STANDARDS AND LAWS

0.1.2.1 THE EN 81-41 STANDARD

The projecting of this system is inspired, on many points, to the harmonized standard of the elevators EN 81-2 and in some points even to the EN 81-41 that it is concerning the use by disabled people of the platforms with car not fully closed (then without doors).

The Home Lifty, even though in its standard version, with the certificate of EC type, is not fully compliant with the EN 81-41, if specifically requested by the customer, in many cases, it can be supplied fully compliant with this standard without the need for further certifications or documents.

0.1.2.2 THE EN 81-70 STANDARD

In some cases (local realities) it's required the application of the harmonized standard for elevators EN 81-70, although we believe this request is not correct we can provide, if expressly requested, a platform in compliance with this harmonized standard.

© 05.06.2013 – Rev.:05.06.2013.09.15 (J2)

0.1.3 LOCAL STANDARDS AND LAWS : ITALY

0.1.3.1 LAW 13 - 09/01/1989 E DM 236 - 14/06/1989

In Italy, in order to access to government grants and/or very interesting tax breaks, the system may be required in accordance with Law 13 of 09/01/1989 which imposes specific requirements to make the building "accessible" and "usable" (declined in general follows the general concept of architectural barriers).

The specific requirements to be followed are set out in the DM 236 of 14/06/1989 and to concern both lift systems that lift platforms.

The Lift platforms, though they require much less stringent requirements and no longer in line with the Machinery Directive 2006/42/EC on access to government grants and tax breaks, however, are in fact equivalent to the lift systems.

Briefly summarizing, the minimum requirements for the car, only apply to existing buildings, are as follows: size 800x1200 mm, load 400 kg, capacity 5 people, doors opening 750 mm. In addition, the car doors must be automatic, while landing doors may also be hinged provided with automatic opening.

0.1.3.2 LAW 6 - 20/02/1989 - LOMBARDY

In Lombardy, in addition, the regional law n. 6 of the 20/02 of 1989, puts further limits on the removal of architectural barriers, bringing the minimum size of cabin to 900x1300 mm and the minimum aperture of the doors to 850 mm. The doors, however, "should" only be automatic side-scrolling. Even in this case, despite the law holds for the elevators often the requirements are also extended to the lift platforms.

0.2 RULES REFERENCE

Directive 2006/42/EC	Machinery directive
EN 81-2:1998 + A3:2009	Safety rules for the construction and installation of lifts Part 2: Hydraulic lifts
EN 81-41:2011	Safety rules for the construction and installation of lifts. Special lifts for the transport of persons and goods Part 41: Vertical lifting platforms intended for use by persons with impaired mobility
EN 81-58:2003	Safety rules for the construction and installation of lifts. Examination and tests Part 58: Landing doors fire resistance test
EN 81-70:2005	Safety rules for the construction and installations of lifts Particular applications for passenger and good passengers lifts Part 70: Accessibility to lifts for persons including persons with disability
EN 12016:2004+A1:2008	Electromagnetic compatibility - Product family standard for lifts, escalators and passengers conveyors - Immunity
EN 12183:2009	Manual wheelchairs Requirements and test methods
EN 12184:2009	Electrically powered wheelchairs, scooters and their chargers Requirements and test methods
UNI EN 12385-3:2008	Steel wire ropes - Safety Part 3: Information for use and maintenance.
UNI EN 12385-5:2008	Steel wire ropes - Safety Part 5: Stranded ropes for lifts
UNI EN 13015:2008	Maintenance for lifts and escalators Rules for maintenance instructions
EN 13411-6:2004+A1:2008	Terminations for steel wire ropes - Safety Part 6: Asymmetric wedge socket
EN 13411-7:2006+A1:2008	Terminations for steel wire ropes - Safety Part 7: Symmetric wedge socket
UNI EN ISO 13857:2008	Machine safety - Safety distance to avoid access to dangerous areas with arms or legs.
ISO 14798:2010	Lifts (elevators), escalators and moving walks Risk assessment and reduction methodology

 © 05.06.2013 – Rev.:05.06.2013.09.15 (J2)

0.3 TECHNICAL SPECIFICATIONS

SYSTEM	
PROJECT NAME	HLDM
COMMERCIAL NAME	HOME LIFTY
DRIVING MODE	Hydraulic indirect 2:1
LOAD (PERSONS)	from 180 kg (2 persons) to 500 kg (6 persons)
NOMINAL SPEED MAX	up / down = 0.15 m/s
STOPS / SERVICES MAX	8 / 8

SHAFT			
ENTRANCES	1, 2 opposite (180°), 2 adjacent (90°)		
TRAVEL MIN / MAX	3000 / 14000 mm		
PIT MIN	150 mm (170 mm with provision for floor 20 mm high)		
HEADROOM MIN	2500 mm	2600 mm	2700 mm
WITH DOOR OPERATORS	None or folding doors	2AT (sill 90 mm), 2AO (75),	3AT (105), 2AT (70)
MINIMUM DISTANCE BETWEEN FLOORS	2500 mm	Between entrances on the same side	
	500 mm	Between entrances 180° or 90° and NEOS10 without encoder	
	100 mm	Between entrances 180° or 90° and NEOS10 with encoder	

MECHANICAL		
GUIDES	T82B, T90B	
CAR FRAMES	T501R Technolift	T509 Technolift
MAX SUSPENDED LOAD	600 kg	1140 kg
ROPES N° X DIAMETER	2 x ø 8 mm	3 x ø 9 mm
RULE REFERENCES	UNI EN 12385-5	
TYPE	8x19S-IWRC	
DEGREE (TENSILE STRENGTH)	1570 N/mm^2	
MECHANICAL DEVICE OF PROTECTION IN THE PIT	Mechanical stop operated from the outside of the shaft, equipped with electrical device to control the position, which ensures in the pit the spaces needed for survival, maintenance and exit.	

MACHINERY		
TANK	HL DRY, HL 50 DRY	
VALVE	3010 ¾", NGV ¾", 3010 ¾"+ DLV ¾"	
PUMP	12L, 15L, 20L, 23L	
MOTOR	Single-phase 50Hz 1,5 e 2,2 kW	Single-phase 60Hz 1,8 e 2,6 kW
JACK DIAMETER	70, 80, 90 mm	
THICKNESS	5 - 7,5 - 12 mm	
PIECES	1, 2	
RUPTURE VALVE	VC3006/B	

CAR	
WIDTH MIN / MAX	800 / 1400 mm
DEPTH MIN / MAX	800 / 1400 mm
SURFACE MAX	1,54 m^2
HEIGHT MIN / MAX	2000 / 2200 mm
MATERIALS	Skinplate, sheet metal covered with plastic laminate, painted sheet metal, glass, stainless steel

© 05.06.2013 – Rev.:05.06.2013.09.15 (J2)

DOORS		
OPENING	Width	700 / 900 mm
	Height	2000 / 2100 mm
CAR DOORS	None, automatic folding doors, automatic telescopic with 2 panels (2AT), with 3 panels (3AT) automatic central opening with 2 panels (2AO)	
LANDING DOORS	Hinged doors (1BM), automated hinged doors (1BA), automatic telescopic with 2 panels (2AT), with 3 panels (3AT) automatic central opening with 2 panels (2AO)	
MATERIALS	Skinplate, painted sheet metal, glass, stainless steel	

ELECTRICAL PART	
CONTROL PANEL	Microprocessor, model NEOS10
MANOEUVRE	Automatic Push-Button, Deadman
POWER	
CONTROL PANEL	220 / 240 VAC (50 / 60HZ – MONOFASE)
CARD / COMMANDS	42VDC / 24 VDC
SOLENOID VALVE	24 VDC
ELECTRICAL EMERGENCY	24 VDC
STARTING	Direct

© 05.06.2013 – Rev.:05.06.2013.09.15 (J2)

0.4 MAIN STANDARD PARTS AND OPTIONS

MECHANICAL				
GUIDES	●	-	Guides T82/B	
	●	-	Bar length 5000 mm	
	○	-	Guides T90/B	When the fixing distance is > 1500 mm and > of the maximum permitted fixing distance.
	○	-	Bar length 2500 mm	When it is impossible to intoduce in the shaft bars 5000 mm long.
BRACKETS	●	-	Brackets for anchors	
	○	-	Brackets for Halfen	When the fixing wall is pre-arranged for Halfen
	○	-	Brackets to be walled	When the fixing wall is made with brickwork
MACHINERY				
JACK	●	-	Jack 1 piece	
	●	-	Fluid inlet low	
	●	-	Additional fixing bracket for piston	When you need to reinforce the fixing of the piston, standard if piston length > 5000 mm
	○	-	Jack 2 pieces	When it is impossible to transport or to introduce a piston in a piece into the shaft
	○	-	Fluid inlet high	When the fluid required is a little less than the total capacity of the tank
	○	-	Additional fixing bracket for piston	When you need to reinforce the fixing of the piston.
POWER UNIT	●	-	Valve 3010	
	●	-	Hose ¾” 3 m long	
	○	-	Electronic valve NGV ¾”	Provides very high performance as comfort level. Recommended in prestigious installations. The valve include the double closure as standard.
	○	-	Valve DLV ¾ per 3010	When the valve 3010 is required with the double closure
	○	-	Fluid heating system NEOS-SEFTEC	When the power unit and the jack are installed in places where the temperature may fall below 5 ° C. It also keep the system efficiency.
	○	-	External fluid level (only for tank HL50 DRY)	It allows instant and more accurate control of the fluid level of the tank.
	○	-	Hose ¾”	When you need a hose with a length > 3 m and <= 10 m
	○	-	Hose 1” (with necessary fittings)	When you need a hose with a length > 10 m and <= 14 m Necessary to reduce load losses.
	○	-	Hose 1 ¼ (with necessary fittings)	When you need a hose with a length > 14 m and <= 25 m Necessary to reduce load losses.
	○	-	Tank collecting oil	Prevents that any leakage of fluid from the cylinder head ends up in pit
	○	-	Fluid ISO VG 46	Fluid recommended for standard use
	○	-	Fluid ISO VG 32	Fluid recommended for outdoor installations or in cold climate places
	○	-	Mineral oil Hydromax	(Only for France)
		-	Mineral oil Texaco	(Only for Portugal)

© 05.06.2013 – Rev.:05.06.2013.09.15 (J2)

CABINET	●	-	Included	
	○	-	Excluded	When is available a suitable local to install the machinery
CAR				
ACCESSORIES	●	-	Car apron height 100 mm	
	○	-	Handrail in one or two pieces	
	○	-	Handrail with curved joints	
	○	-	Counter-column	
	○	-	Infrared detectors integrated into the front angle panel of the car	
	○	-	Car entrance in scotch brite stainless steel	
	○	-	Stainless steel safety band for glass wall	When you can not install a handrail compliant to the standards. Necessary to protect against a fall in the event of breakage of a glass wall. Necessary for cars with a width 800 mm and with folding doors with opening 700 mm. Necessary when the front angle panel on the handrail side < 75mm
	○	-	Foldable seat	Required by Law 6 of the Lombardy Region
CAR DOORS				
	○	-	Car door locking device complete with release device for each landing door.	Required if the distance between wall and the sill of the car door is greater than 150 mm. Option not available for automatic doors with central opening.
AUTOMATIC				
	○	-	Brackets reinforced to support sill	When heavy objects are loaded in the car frequently
FOLDING DOORS	●	-	ECC flat type without vision panel	
	●	-	Electronic circuit (2CT)	
	●	-	Side acting retractable cam, with slide to unlock 100 mm long	
	●	-	Car sill support	
	○	-	Standard vision panel - Panoramic vision panel	Allow you to see the presence of the car at floor ensuring a greater safety level
LANDING DOORS				
AUTOMATIC	●	-	Safety switch on the lock of the emergency triangular key of the door	Compulsory, for security reasons, on the landing door that allows to access in pit. It can not be installed if the emergency triangular key is located on the panel.
	ℹ	When the switch is open, the system is put out of service. To return the system in service is not enough to close the switch but you must also perform a restore operation on control panel		
	○	-	Panel height 2100 mm	When it is necessary an access of height > 2000 mm
	○	-	Lowered door frame 2150 mm	When the ceiling height of the landing floor is not sufficient
	○	-	Halfen to fix doors	When the fixing wall is pre-arranged for Halfen

CONTINUE

© 05.06.2013 – Rev.:05.06.2013.09.15 (J2)

	○	-	Upright with cut for separate plate with display and arrows	When you want to install the display at height > 1800 mm
	○	-	Upright without cut or with bigger cut	When you must to install or push-button panels with back box to be walled or panels with display and 2 or 3 buttons
HINGED DOORS	●	-	Model Global - Without vision panel and upright width 125 mm - Ral finishes 7032	
	○	-	Mod. Global - With standard vision panel - Mod. Fermator - With panoramic vision panel and upright width 135mm - Ral finishes in the catalogue	
AUTOMATISM FOR HINGED DOORS	●			Facilitates the access to the car to the users in wheelchairs unaccompanied
	○	-	Remote control	
ELECTRICAL PART				
INFRARED DETECTORS	●	-	One of the devices listed below must be installed on each entrance of the car.	Required and necessary to ensure the safety of the persons in car.
	○	-	Standard infrared detector	Minimum compulsory for cars with automatic doors
	○	-	Safety infrared detector	Minimum compulsory for cars without doors and not equipped with dead man
	○	-	Infrared detector 3D	Device with wide radius of effectiveness which acts before the object or the person reaches the door itself.
RESCUE	●	-	One or more of the devices listed below must be installed in car.	Required and necessary to allow to a person trapped in the car to ask for help
	○	-	Telephone line switch PSTN	Required when you use a shared phone line, it gives priority to the device installed in the car compared to all devices that use the telephone line.
		-	Telephone PSTN (not supplied) (normal home phone)	It can be installed separately if you are using a dedicated line or combined with the telephone line switch if you are using a shared line.
	○	-	Autodialer PSTN	It is a complying to EN 81-28, bi-directional device for PSTN line .Can be installed separately if you are using a dedicated line or combined with the telephone line switch if you are using a shared line
	○	-	Autodialer GSM	It is a complying to EN 81-28, bi-directional device for GSM line.Can be installed separately because it always uses a dedicated line. It is necessary to verify GSM coverage in the precise location of installation of the device and to stipulate a specific contract with a mobile network carrier.
	○	-	Arrangement for autodialer provided by the customer	In this case, must be communicated the specifications of the device to be used which must be tested and approved by GMV.

IN CAR	●	-	Display LCD Tricolor	
	○	-	Secondary push-button panel	
	○	-	Key switches	
	○	-	Close door push-button	
	○	-	Selective door opening if you have 2 entrances on the same floor	
	○	-	Vocal synthesizer	
	○	-	Anello induttivo	
AT LANDINGS	○	-	Monochrome LCD display with arrows in the landing push-button panel	
	○	-	Monochrome LCD display with arrows in a separate push-button panel	
	○	-	Signal : In alarm (gem)	
	○	-	Key switch	
	○	-	Box to be walled	
RULE EN 81-70	●	-	Close door push-button	
	●	-	Push-buttons with audible warning	
	●	-	Push-button of the main floor green coloured and in relief	
	●	-	Display LCD Tricolor	
	●	-	Vocal synthesizer	
	●	-	Autodialer	
	●	-	Infrared detectors in car	
	●	-	Secondary push-button panel	Compulsory in event of opposite entrances with central opening doors
	○	-	Inductive ring	It allows to hearing-impaired people to hear more clearly the messages
LAW 13 (ITALY)	●	-	Signal “In alarm” at main floor	
	●	-	Autodialer PSTN or GSM	
	○	-	Signal “In alarm” at other floors	
IN THE SHAFT	●	-	Shaft lighting	Compulsory to install a lighting system in the shaft. Supplied by GMV or by the customer
	○	-	Encoder	Necessary when one of the distances between floors is between 100 and 500 mm
	○	-	Programmer PT01	Necessary to manage the control panel, the NGV valve and the operator of the automatic doors

© 05.06.2013 – Rev.:05.06.2013.09.15 (J2)

1 MECHANICAL PART

1.1 GUIDES

● **T82/B - ISO 7465:1997(E)**

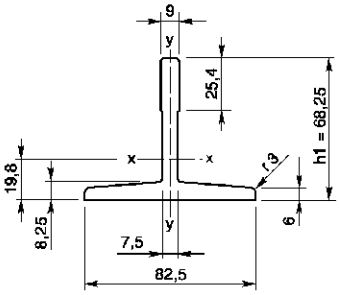

S	ql	I_{xx}	W_{xx}	i_{xx}	I_{yy}	W_{yy}	i_{yy}
cm^2	kg/m	cm^4	cm^3	cm	cm^4	cm^3	cm
10,90	8,55	49,40	10,20	2,13	30,50	7,40	1,67

MATERIAL	E 275 B (ISO 630:1995) (Fe 430 B)		
FINISHING		Machined	
BAR LENGHT		5000 mm	●
		2500 mm	○
JUNCTION PLATES		80 x 216 x 10 mm	
JUNCTION BOLTS		M12x35	

○ **T90/ B - ISO 7465:1997(E)**

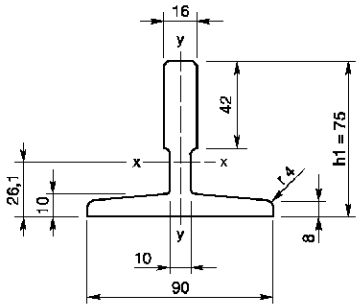

S	ql	I_{xx}	W_{xx}	i_{xx}	I_{yy}	W_{yy}	i_{yy}
cm^2	kg/m	cm^4	cm^3	cm	cm^4	cm^3	cm
17,25	13,55	102,00	20,87	2,43	52,60	11,80	1,75

MATERIAL	E 275 B (ISO 630:1995) (Fe 430 B)		
FINISHING		Machined	
BAR LENGHT		5000 mm	●
		2500 mm	○
JUNCTION PLATES		90x305x13 mm	
JUNCTION BOLTS		M12x35	

1.2 FIXING GUIDES

1.2.1 BRACKETS

TYPE ST (FOR ANCHORS)

cod.BRSTTASTxxDX / SX		
MT		2 x M12
MS		2 x M12

TYPE ST/D (FOR HALFEN)

cod.BRSTTASTxxDXD / SXD		
MT		2 x M16
MS		2 x M12

TYPE SM (TO BE WALLED)

cod. BRSTMUSMxxDX / SX		
M	~ 110 mm	
MS		2 x M12

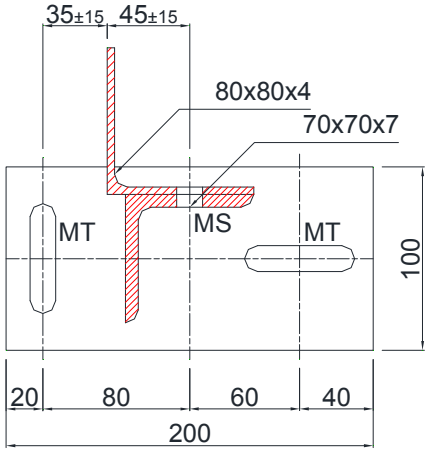

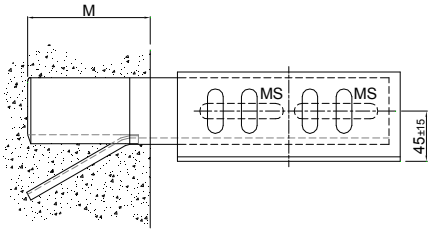

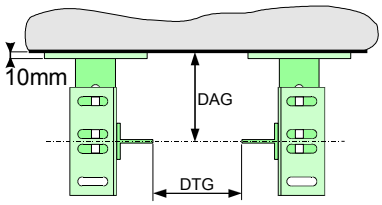

STxx,SMxx	DAG >	DAG <=
ST13,SM13	130	170
ST17,SM17	170	210
ST21,SM21	210	250
ST25,SM25	250	290
ST29,SM29	290	330
ST33,SM33	330	370

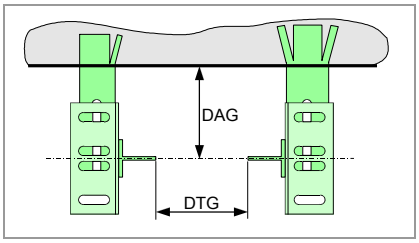

1.2.2 COUNTERBRACKETS

TIPO	MS	GUIDE	CLIP
CS 180	2 x M12	T82/B T90/B	T2 T3

© 05.06.2013 – Rev.:05.06.2013.09.15 (J2)

1.3 ROPES

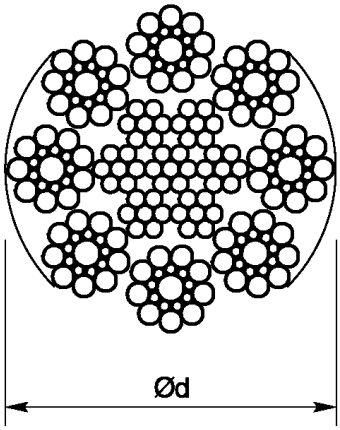

MAIN FEATURES (ACCORDING TO EN 12385)			
NOMINAL DIAMETER ØD	[mm]	8	9
TYPESETTING		8 x 19 S (1-9-9) + AM	
TENSILE STRENGTH	[N/mm^2]	1570	1570
MIN BREAKING LOAD	[N]	35800	45300

© 05.06.2013 – Rev.:05.06.2013.09.15 (J2)

2 HYDRAULIC SYSTEM

2.1 POWER UNITS

2.1.1 POWER UNIT TYPE HL DRY

VALVE 3010

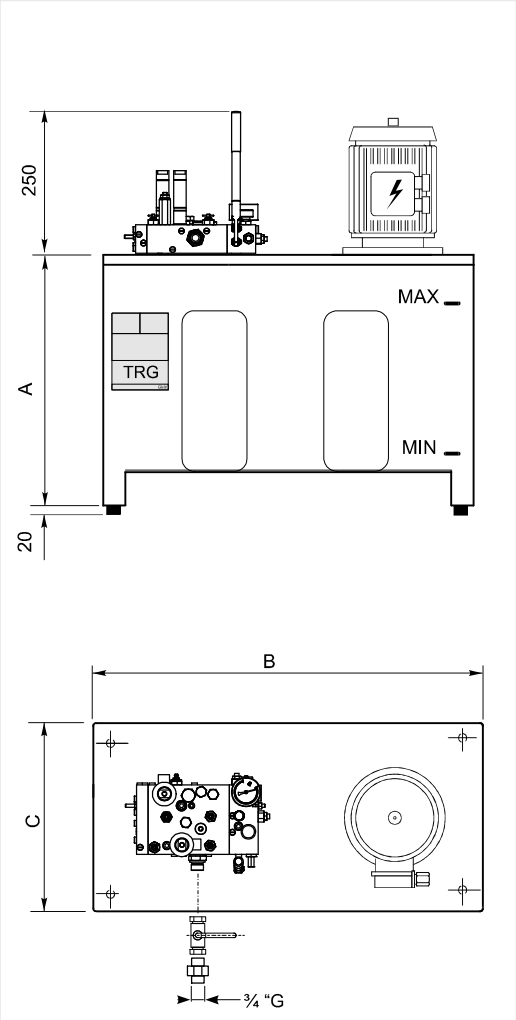

VALVE NGV

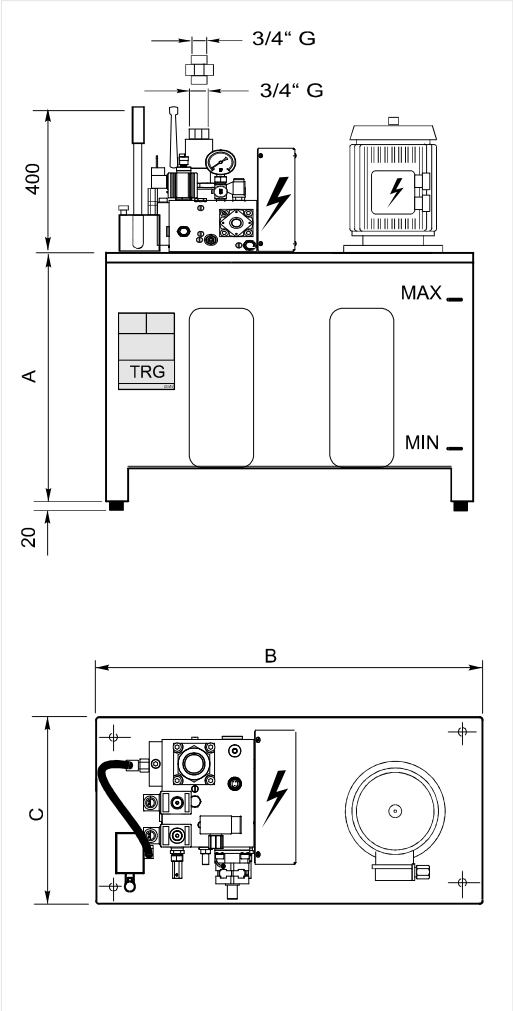

TECHNICAL SPECIFICATION	50 Hz	60 Hz
	2 POLES - 1 PHASE	2 POLES - 1 PHASE
MOTOR POWER [KW]	1,5 - 2,2	1,8 - 2,6
PUMP TYPE	15L - 20L - 23L	12L - 15L - 20L
RATED PUMP FLOW [L/MIN]	15 - 20 - 23	15 -18 - 24
EFFECTIVE PUMP FLOW [L/MIN]	16,5 - 20,9 - 24,4	15,2 - 19,8 - 25,1
MAX STATIC PRESSURE [BAR/MPA]	45 / 4,5	
MIN STATIC PRESSURE [BAR/MPA]	12 / 1,2	

TANK	HL DRY
MATERIAL	Plastic
DIMENSION A [MM]	370
DIMENSION B [MM]	565
DIMENSION C [MM]	325
EMPTY WEIGHT [KG]	Max 45
FLUID FOR TOTAL FILLING [L]	48
CIRCULATING FLUID (USEFUL) [L]	Max 33
MIN FLUID (TO COVER PUMP) [L]	15

© 05.06.2013 – Rev.:05.06.2013.09.15 (J2)

2.1.2 POWER UNIT TYPE HL50 DRY

VALVE 3010

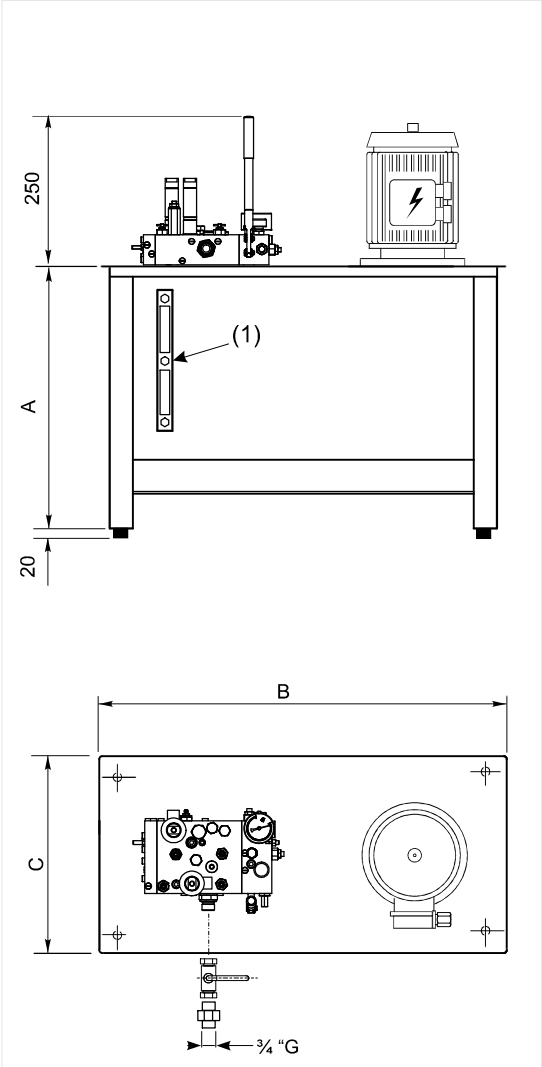

VALVE NGV

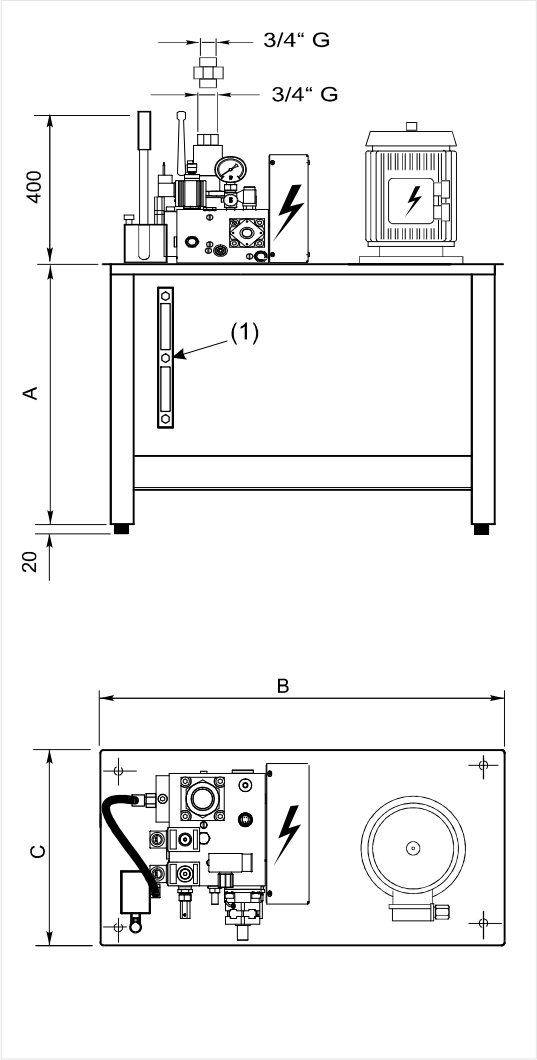

TECHNICAL SPECIFICATION	50 Hz	60 Hz
	2 POLES - 1 PHASE	2 POLES - 1 PHASE
MOTOR POWER [kW]	1,5 - 2,2	1,8 - 2,6
PUMP TYPE	15L - 20L - 23L	12L - 15L - 20L
RATED PUMP FLOW [l/MIN]	15 - 20 - 23	15 -18 - 24
EFFECTIVE PUMP FLOW [l/MIN]	16,5 - 20,9 - 24,4	15,2 - 19,8 - 25,1
MAX STATIC PRESSURE [BAR/MPA]	45 / 4,5	
MIN STATIC PRESSURE [BAR/MPA]	12 / 1,2	

TANK	HL 50 DRY
MATERIAL	Metal
DIMENSION A [MM]	540
DIMENSION B [MM]	560
DIMENSION C [MM]	290
EMPTY WEIGHT [KG]	Max 55
FLUID FOR TOTAL FILLING [L]	65
CIRCULATING FLUID (USEFUL) [L]	Max 50
MIN FLUID (TO COVER PUMP) [l]	15

© 05.06.2013 – Rev.:05.06.2013.09.15 (J2)

2.2 RUPTURE VALVE VC3006/B ¾”

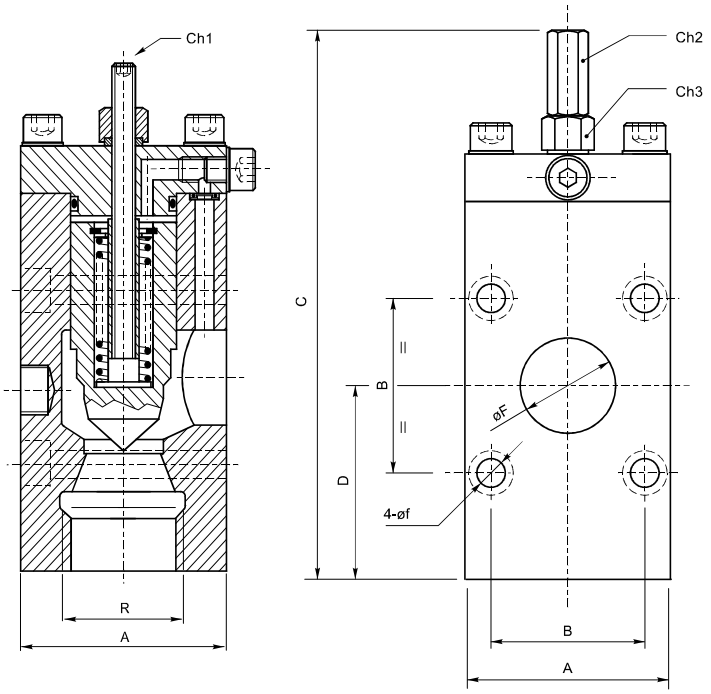

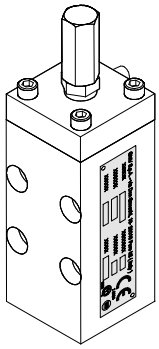

Working pressure
[bar] 12 ÷ 60

Working temperature
[°C] 5 ÷ 70

Kinematics viscosity
[cSt] 16 ÷ 240

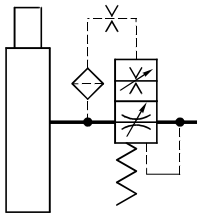

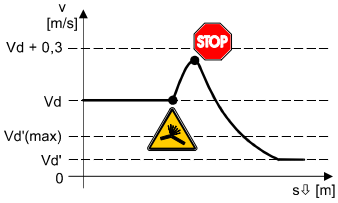

Load [l/min]		A	B	C	D	øF	øf	Ch1	Ch2	Ch3	R	Weight
min	max					[mm]						[kg]
8	150	50	36	135	44	18	8,5	3	10	13	¾”G	2

2.3 JACKS

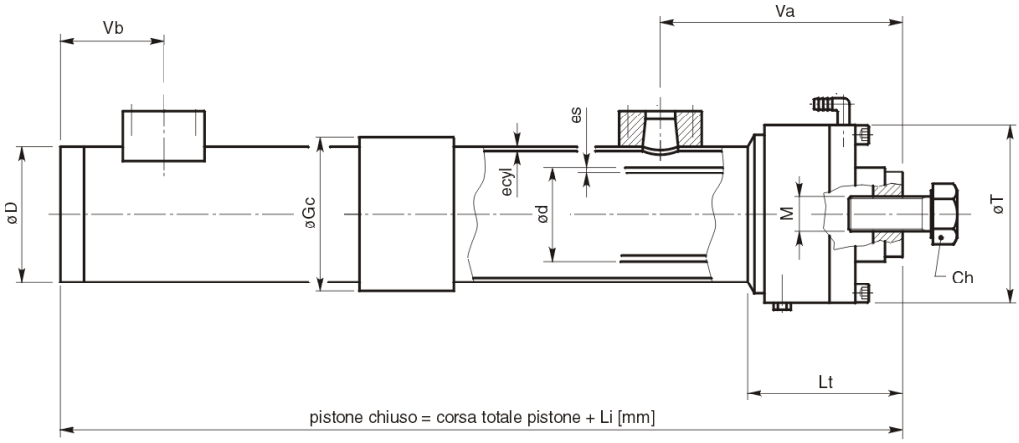

ød	es	øD	ecyl	øT	øGc	Va	Vb	Lt	Li	Ch	M	Qp0	Qp1
						[mm]						[kg]	[kg/m]
70	5	101,6	3,6	131	142	247	100	187	206	46	M30	16	20
80	5	101,6	3,6	150	142	247	100	187	206	46	M30	21	21
	7,5												25
90	5	114,3	4,0	157	155	247	100	187	206	46	M30	28	25
	7,5												30
	12												38

Qp0: jack weight for stroke = 0 Qp1: jack weight per meter

© 05.06.2013 – Rev.:05.06.2013.09.15 (J2)

2.3.1 PIPES

2.3.1.1 HOSES

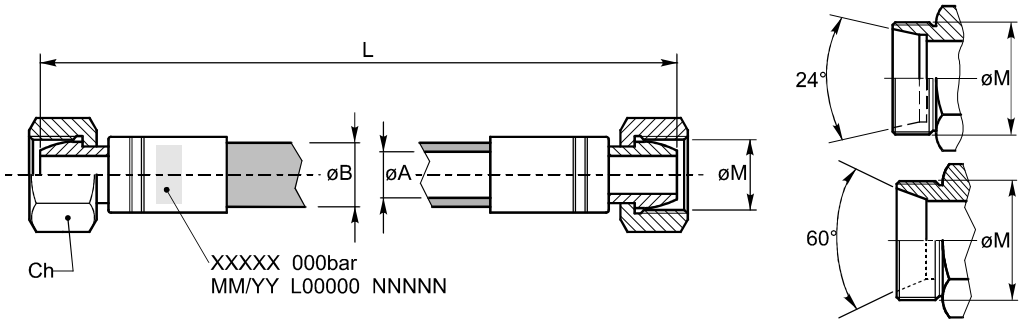

According with rule EN 853/1SN

DIMENSIONS		LENGHT [MIN | MAX]		øA	øB	CH	MINIMUM BENDING RADIUS	TERMINAL	SEAT	WEIGHT	FLUID VOLUME	MINIMUM BURSTING PRESSURE	MAXIMUM WORKING PRESSURE
[inch]	[DN]	[m]	[m]	[mm]	[mm]	[mm]	[mm]	M	[°]	[kg/m]	[l]	[bar]	[bar]
¾”	19	0	10	19,0	27,4	32	240	Gas 3/4"	60	0,65	0,3	420	52
1“	25	11	14	25,4	35,3	41	300	M36x2	24	0,96	0,5	360	45
1“¼	32	15	25	31,8	43,3	50	420	M45x2	24	1,25	0,8	375	46

Standard previsto : ¾” lunghezza 3 metri

2.3.1.2 BRAKETS TO FIX HOSES

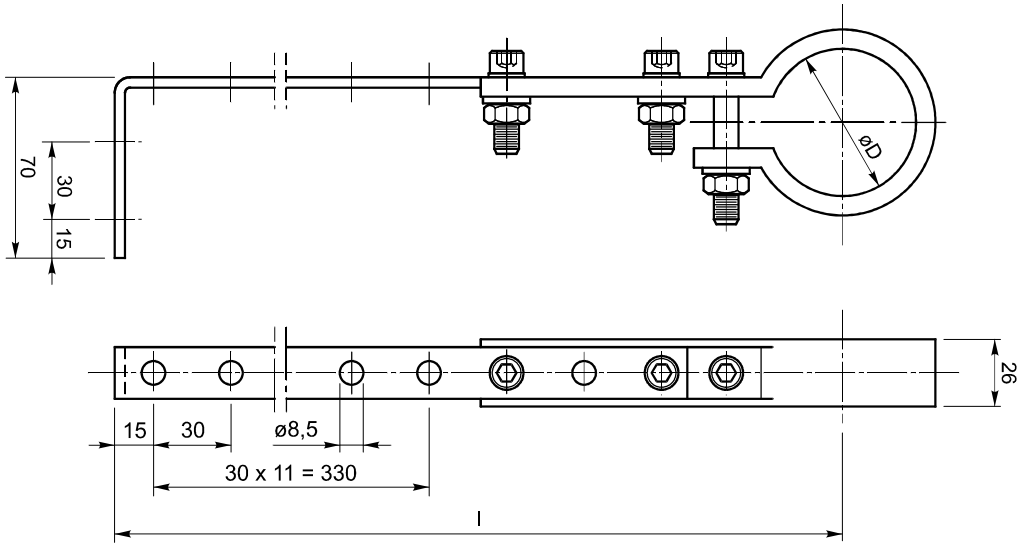

HOSE	øD	l [MM]
¾”	35 mm	385
1”	42 mm	395
1” ¼	51 mm	400

2.3.2 FLUIDS

SPECIFICATIONS	METHOD	VALUE PER UNIT
Density at 15ºC	ISO 3675	870 kg/m3
Viscosity at 40ºC	ISO 3104	45.0 mm2/s
Viscosity at 100ºC	ISO 3104	7.97 mm2/s
Viscosity index	ISO 2909	150 -
Flash point	ISO 2592	215 ºC
Critical point of fluidity	ISO 3016	-36 ºC

2.4 CABINETS

2.4.1 CABINET TYPE EASY

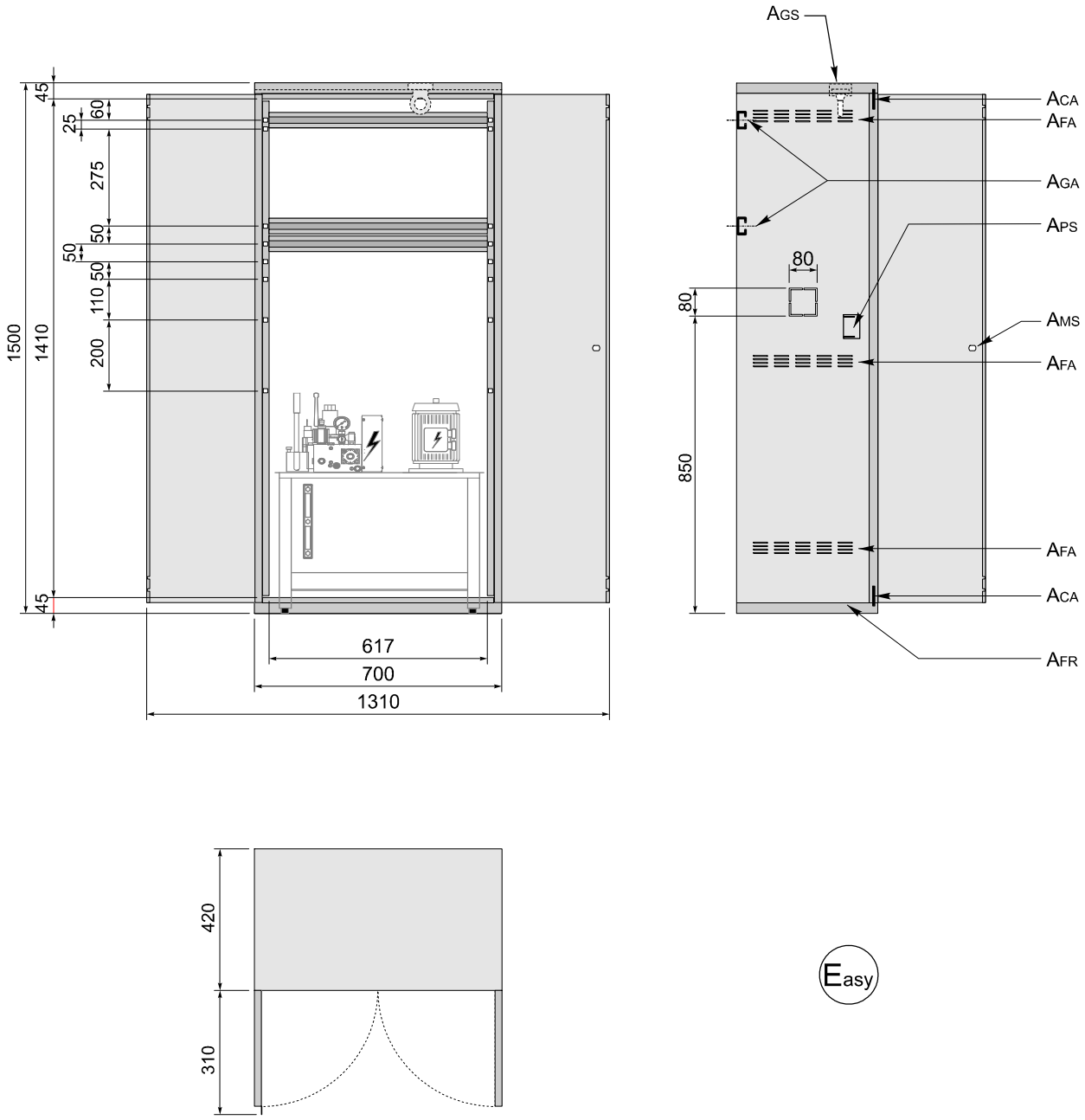

ACA	Hinge	**AGA**	Support guides for control panel
ACI	Power unit	**AMS**	Lock
AFA	Ventilation slit	**APS**	Support plate for switchbox
AFR	Watertight oil collecting tray		

© 05.06.2013 – Rev.:05.06.2013.09.15 (J2)

3 CAR FRAMES

3.1 MODEL T509 2:1

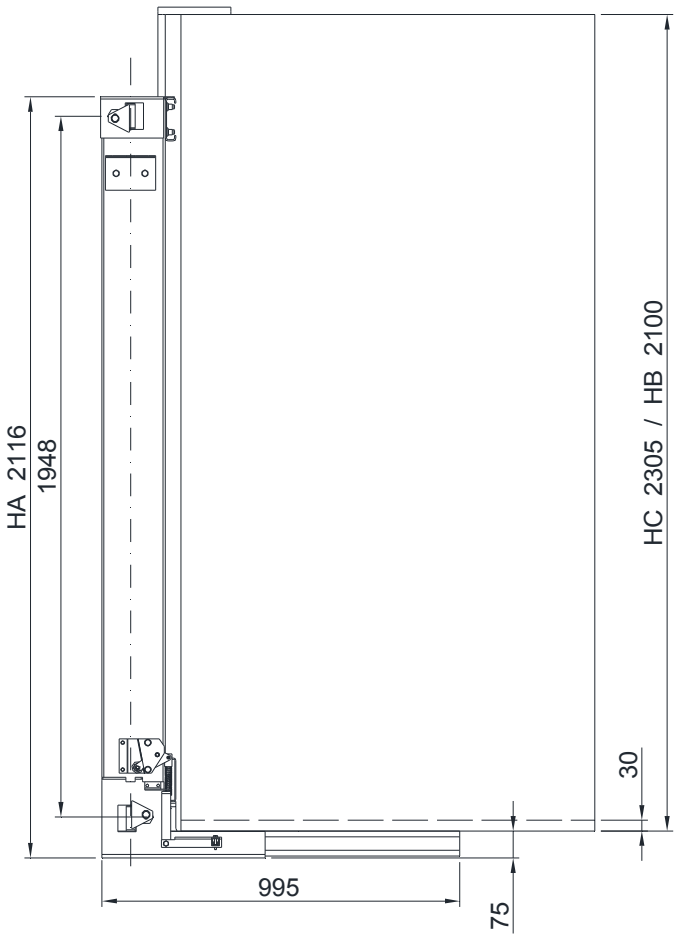

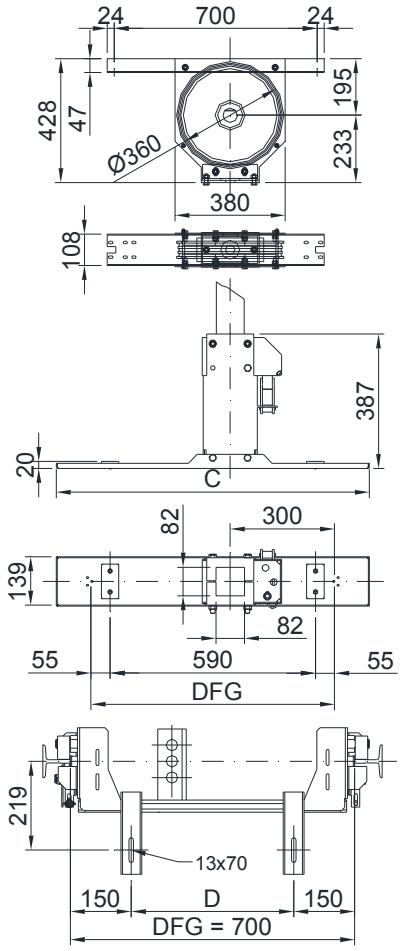

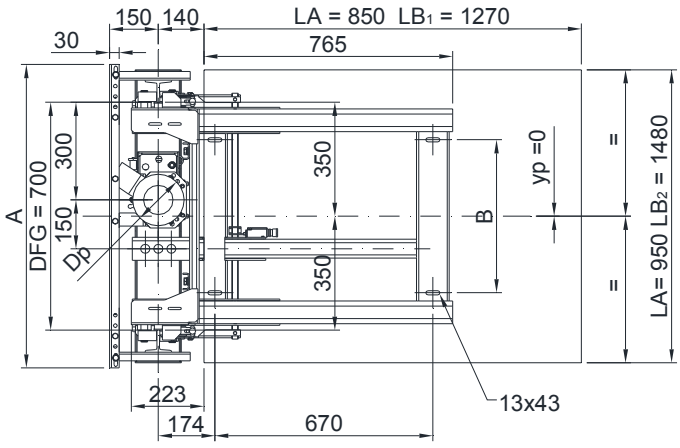

TECNICAL SPECIFICATIONS	
Loads	
Max suspended load (Pa+Pc+Q)	1140 kg
Car frame weight (Pa)	120 kg
Pulley frame weight	34 kg
Max speed	0,15 m/s
STD guide rails	T82x68x9 T90x75x16
Nr. of ropes and diameter	3 x Ø9
Tensile strength	1570
Pulley diameter	Ø360
Shoe type	sliding
Max piston diameter "Dp"	Ø158

DFG	A	B	C	D
700	932	470	900	400

LA	Car external min	**LB**	Car external max	**LC**	Car fixings	**PI**	Pillar height Max 3500 mm
HA	Car frame height	**HB**	Car height min	**HC**	Car height Max		
yp	position of the car mass (P) in relation to the guide rail cross coordinates						

Standard ropes fixings of the car frame (in the drawing) to the left of the piston, available to the right only on request

© 05.06.2013 – Rev.:05.06.2013.09.15 (J2)

3.1.1 MODEL T501R 2:1

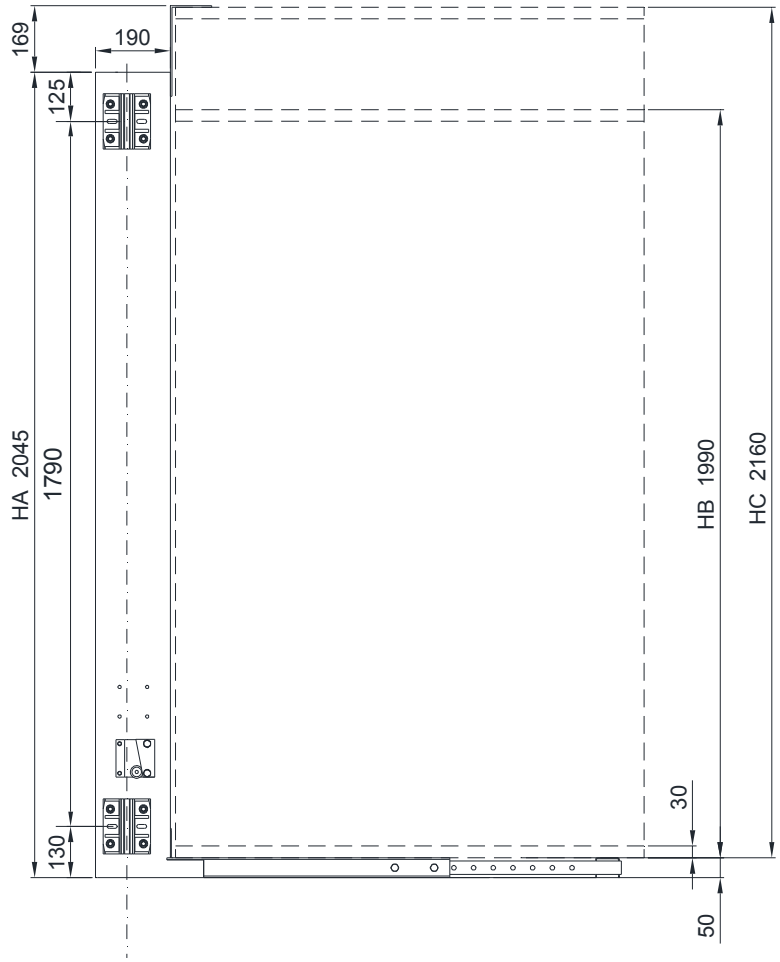

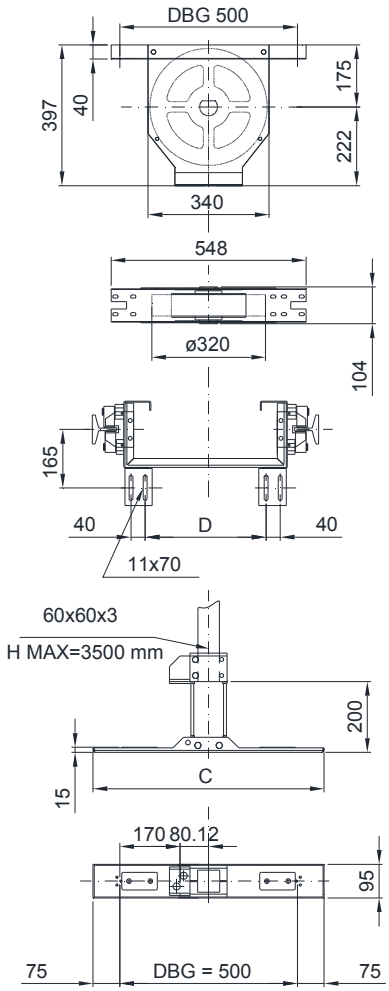

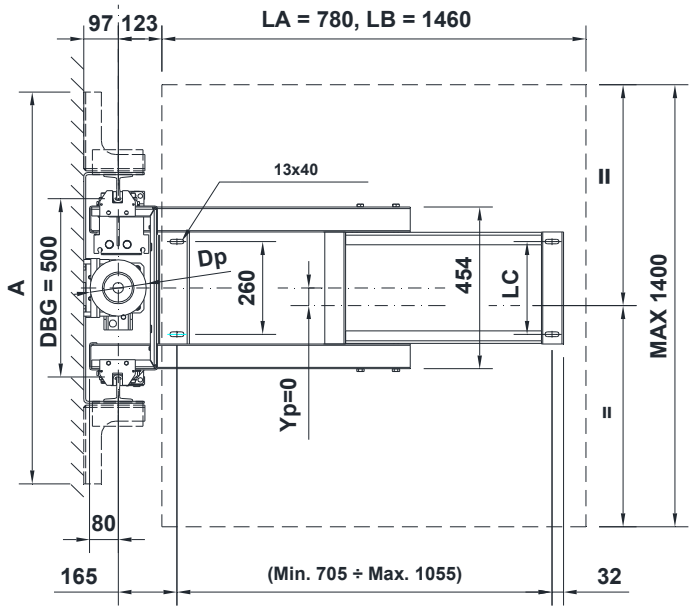

TECNICAL SPECIFICATIONS	
Loads	
Max suspended load (Pa+Pc+Q)	600 kg
Car frame weight (Pa)	90 kg
Pulley frame weight	23 kg
Max speed	0,15 m/s
STD guide rails	T82x68x9
Nr. of ropes and diameter	2 x Ø8
Tensile strength	1570
Pulley diameter	Ø320
Shoe type	sliding
Max piston diameter "Dp"	Ø158

DBG	A	B	C	D
500	1100	260	650	340

USED ONLY WITH CAR 800x800 MM

LA	Car external min	**LB**	Car external max	**LC**	Car fixings	**PI**	Pillar height Max 3500 mm
HA	Car frame height	**HB**	Car height min	**HC**	Car height Max		
yp	position of the car mass (P) in relation to the guide rail cross coordinates						

Std ropes fixings of the car frame (in the drawing): to the right of the piston, movable to the left during installation

© 05.06.2013 – Rev.:05.06.2013.09.15 (J2)

4 CARS

4.1.1 DIMENSIONS

In the following paragraphs are shown the dimensions of the cars defined as a standard product. There are different possibilities depending on the required reference standards (Directive 2006/42/EC, EN 81-41 in several ways, EN 81-70). For car dimensions different from standard, please ask to your referring salesman to check availability and feasibility.

4.1.2 DIMENSIONS ACCORDING TO THE MACHINERY DIRECTIVE 2006/42/EC

Rated Load [kg]					Width [mm]	Depth [mm]	Door opening [mm]					Area [m²]
180	250				800	800	700	750	800*			0,64
180	**250**	320			800	1000	700	750	800*			0,80
					850	1000		750	800			0,85
					900	1000			800	850	900*	0,90
					800	1200	700	750	800*			0,96
			400		900	1100			800	850	900*	0,99
					800	1250	700	750	800*			1,00
					1000	1000			800	850	900	1,00
	250	**320**			800	1300	700	750	800*			1,04
					900	1200			800	850	900*	1,06
					900	1250			800	850	900*	1,13
					900	1400			800	850	900*	1,26
					1000	1250			800	850	900	1,25
		320	**400**	500	1100	1250			800	850	900	1,36
					1100	1300			800	850	900	1,43
					1100	1400			800	850	900	1,54
					1200	1250			800	850	900	1,50

Standard loads

*Opening not available with car folding doors

4.1.3 DIMENSIONS ACCORDING TO THE UNI EN 81-41 - PRIVATE BUILDINGS

The EN81-41 provides only cars without door

4.1.3.1 LONE USER EITHER STANDING OR IN A TYPE A WHEELCHAIR

Rated Load [kg]					Width [mm]	Depth [mm]	Door opening [mm]			Area [m²]
	250	320			800	1250	800			1,00
	250	**320**	400		800	1300	800			1,04
					900	1250	800	850	900	1,13
					1000	1250	800	850	900	1,25
		320	**400**	500	1100	1250	800	850	900	1,36
					1100	1300	800	850	900	1,43
					1200	1250	800	850	900	1,50

4.1.3.2 USER IN A TYPE A OR B WHEELCHAIR WITH AN ATTENDANT

		320	400		900	1400		850	900	1,26
		320	**400**	500	1100	1400		850	900	1,54

4.1.4 DIMENSIONS ACCORDING TO THE UNI EN 81-41 - PUBLIC BUILDINGS

4.1.4.1 USER IN A TYPE A OR B WHEELCHAIR WITH AN ATTENDANT*

Rated Load [kg]				Width [mm]	Depth [mm]	Door opening [mm]					Area [m²]
		400	500	1100	1400				850	900	1,54

Standard loads

*Not available with adjacent entrances

© 05.06.2013 – Rev.:05.06.2013.09.15 (J2)

4.1.5 TYPES OF ENTRANCES

For all dimensions and types of car and of car doors are provided the following layouts of the entrances:

ENTRANCE	
TYPE	LAYOUT
Single	Perpendicular to the guides axis (90°)
Single	Parallel to the guides axis (0°)
Double	Opposite (180°)
Double	Adjacent (90°)

4.2 CAR FINISHES

In the following paragraphs are shown all the car finishes supplied as standard. For car finishes different from standard, please ask to your referring salesman to check availability and feasibility

4.2.1 WALLS

4.2.1.1 PLASTIC LAMINATE

CODE	COLOUR	DESCRIPTION	CODE	COLOUR	DESCRIPTION
114		White - light blue	120		Orange
115		Stone grey	121		Copperfield
116		Carob	123		Brushed silver
117		Lavender	125		Manganite
118		Green	126		Durmast
119		Yellow			

4.2.1.2 SKINPLATE

CODE	COLOUR	DESCRIPTION	CODE	COLOUR	DESCRIPTION
409		Douglas	418		Verde scuro
410		Mahogany	419		Dark green
412		Light grey	420		Scarlet
413		Dark grey	421		Polished white marble
414		Satin	422		Polished beige marble
417		Dark blue			

4.2.1.3 STAINLESS STEEL

CODE	COLOUR	DESCRIPTION	CODE	COLOUR	DESCRIPTION
301		Scotch Brite	303		Linen
			304		Leather
302		Checkers	305		5WL

4.2.1.4 GLASS

CODE	COLOUR	DESCRIPTION	
801		Glass	*with treatment ClearShield™

Legend : ◆ Available ● Standard ○ Optional ⦸ Not available

© 05.06.2013 – Rev.:05.06.2013.09.15 (J2)

4.2.2 FLOORS

4.2.2.1 VINYL LINOLEUM

CODE	COLOUR	DESCRIPTION	CODE	COLOUR	DESCRIPTION
501		Light grey	511		Red
502		Dark grey	513		Dark Blue
509		Beige			

4.2.2.2 STUD RUBBER

CODE	COLOUR	DESCRIPTION	CODE	COLOUR	DESCRIPTION
701		Grey	703		Beige
702		Black	704		Red

4.2.2.3 OTHER

Arrangement for floor 20mm high

4.2.3 ENTRANCES

Below, the finishes of the entrances depending on the type of car

CAR FINISHES		PLASTIC LAMINATE	SKINPLATE	STAINLESS STEEL	GLASS
ENTRANCE FINISHES	Skinplate	⊘	◆	⊘	⊘
	Stainless steel	◆	◆	◆	◆

4.2.4 ILLUMINAZIONI

TYPE	MODEL	MODEL NAME	MATERIAL	LIGTHS	SUPPLY
		Neon	Plexiglass	Neon	●
		Led	Stainless steel	Led	○
		Bubble	Stainless steel	Neon	○
		Domino	Stainless steel	Neon	○

4.2.5 ACCESSORIES

TYPE	MODELL	Q.TY STD	Q.TY MAX	DM 2006/42/CE	EN 81.41	EN 81.70
	Stainless steel handrail ø 40mm Straight	1	3	●	⊘	⊘
	Stainless steel handrail ø 40mm Curved	-	3	○	○	○
	Stainless steel safety band for glass wall	-	3	○	○	○
	Mirror - Half height	1	3	●	○	⊘
	Mirror - Full height	1	3	○	⊘	●
	Counter-column	-	1	○	○	○
	Foldable seat	-	1	○	○	○

© 05.06.2013 – Rev.:05.06.2013.09.15 (J2)

© 05.06.2013 – Rev.:05.06.2013.09.15 (J2)

5 OPERATORS AND DOORS

5.1 CAR DOORS FINISHES

In the following paragraphs are shown all the doors finishes supplied as standard. For car finishes different from standard, please ask to your referring salesman to check availability and feasibility

5.1.1 AUTOMATIC DOORS 2AT, 2AO, 3AT

5.1.1.1 PLASTIC LAMINATE*

CODICE	COLORE	DESCRIZIONE	CODICE	COLORE	DESCRIZIONE
114		White - light blue	120		Orange
115		Stone grey	121		Copperfield
116		Carob	123		Brushed silver
117		Lavender	125		Manganite
118		Green	126		Durmast
119		Yellow			

* Available only for doors 2AT with sill 90 mm and 2AO with sill 75 mm

5.1.1.2 SKINPLATE

CODE	COLOUR	DESCRIPTION	CODE	COLOUR	DESCRIPTION
409		Douglas	418		Dark green
410		Mahogany	419		Scarlet
412		Light grey	420		Polished white marble
413		Dark grey	421		Polished beige marble
414		Satin	422		Pink marble
417		Dark blue			

5.1.1.3 STAINLESS STEEL

301		Scotch Brite	303		Linen
			304		Leather
302		Checkers	305		5WL

5.1.1.4 GLASS

801		Glass*		*with treatment	ClearShield™

5.1.2 AUTOMATIC FOLDING DOORS

5.1.2.1 STAINLESS STEEL

CODE	COLOUR	DESCRIPTION	CODE	COLOUR	DESCRIPTION
301		Scotch brite			

© 05.06.2013 – Rev.:05.06.2013.09.15 (J2)

5.1.3 AVAILABLE FINISHES

5.1.3.1 AUTOMATIC DOORS

Type		Finishes					Openings
		RAL	Stainless steel	Skinplate	Glass windows	Glass panoramic	
Folding		⊘	◆	⊘	◆	◆	700 750 800 850 900
2AT		⊘	◆	◆	⊘	◆	
2AO		⊘	◆	◆	⊘	◆	
3AT		⊘	◆	◆	⊘	◆	

5.1.3.2 MATCHING FINISHES OF CAR DOORS - FINISHES OF CAR AND ENTRANCES

	Car finishes	Plastic laminate	Skinplate		Stainless steel	Glass
	Entrance finishes	Stainless steel	Skinplate	Stainless steel	Stainless steel	Stainless steel
Car doors	None	◆	◆	⊘	◆	◆
	Skinplate	⊘	◆	⊘	⊘	⊘
	Stainless steel	◆	⊘	◆	◆	◆
	Glass	◆	⊘	◆	◆	◆

© 05.06.2013 – Rev.:05.06.2013.09.15 (J2)

5.2 LANDING DOOR FINISHES

5.2.1 AUTOMATIC DOORS 2AT, 2AO, 3AT

5.2.1.1 POLIMOD

CODE	COLOUR	DESCRIPTION	CODE	COLOUR	DESCRIPTION
201		Beige	205		Dark grey
204		Light grey			

5.2.1.2 STAINLESS STEEL

301		Scotch Brite	303		Linen
			304		Leather
302		Checkers	305		5WL

5.2.1.3 GLASS

801		Glass		*with treatment	ClearShield™

5.2.2 MANUAL AND AUTOMATIC HINGED DOORS 1BT

5.2.2.1 RAL PAINTED

220		7032 Pebble grey (Std)	229		6005 Moss green
221		1015 Light ivory	230		6021 Pale green
222		1018 Zinc yellow	231		7004 Signal grey
223		1019 Grey beige	232		7010 Tarpaulin grey
224		1034 Pastel yellow	233		7012 Basalt grey
225		3004 Purple red	234		8023 Orange brown
226		3020 Traffic red	235		9006 White aluminium
227		5011 Steel blue	236		9016 Traffic white
228		5012 Light blue	237		9017 Traffic black

© 05.06.2013 – Rev.:05.06.2013.09.15 (J2)

5.2.3 AVAILABLE FINISHES

5.2.3.1 MANUAL DOORS

Type		Finishes					Openings
		Ral	Stainless steel	Skinplate	Glass windows	Glass panoramic	
Hinged		◆	⊘	⊘	◆	◆	700 - 750 - 800 850 - 900

5.2.3.2 AUTOMATIC DOORS

Type		Finishes					Openings
		Ral	Stainless steel	Skinplate	Glass windows	Glass panoramic	
Hinged Automated		◆	⊘	⊘	◆	◆	700 750 800 850 900
2AT		⊘	◆	◆	⊘	◆	
2AO		⊘	◆	◆	⊘	◆	
3AT		⊘	◆	◆	⊘	◆	

The automated hinged door is useful for a user in a wheelchair without an attendant

5.3 MATCHING CAR DOORS - LANDING DOORS

			Car doors						
			None	Folding			Automatic		
			-	Stainless steel	Glass windows	Glass panoramic	Stainless steel	Glass	Skinplate
Landing doors		Ral	◆	◆	⊘	⊘	⊘	⊘	⊘
		Windows	◆	◆	◆	⊘	⊘	⊘	⊘
		Panoramic	◆	◆	⊘	◆	⊘	⊘	⊘
		Polimod	⊘	⊘	⊘	⊘	◆	⊘	◆
		Glass	⊘	⊘	⊘	⊘	⊘	◆	⊘
		Stainless steel	⊘	⊘	⊘	⊘	◆	⊘	◆

5.4 LOCKS FOR HINGHED DOORS

Tecnolama S7550LB	CMF 7/01

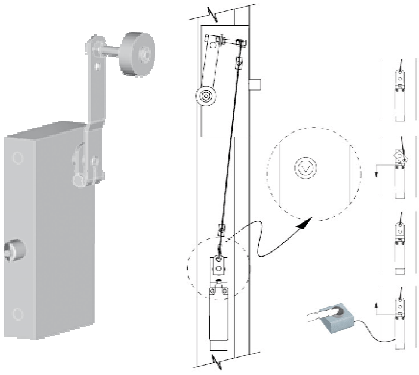

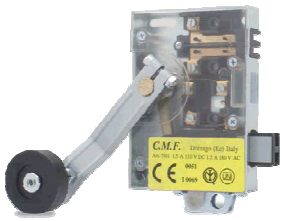

Legend : ◆ Available ● Standard ○ Optional ⊘ Not Available

© 05.06.2013 – Rev.:05.06.2013.09.15 (J2)

5.5 CAR DOORS TECHNICAL SPECIFICATIONS

5.5.1 TELESCOPIC OPERATOR AND CAR DOORS

5.5.1.1 OPERATOR AND DOOR 2AT SILL 90

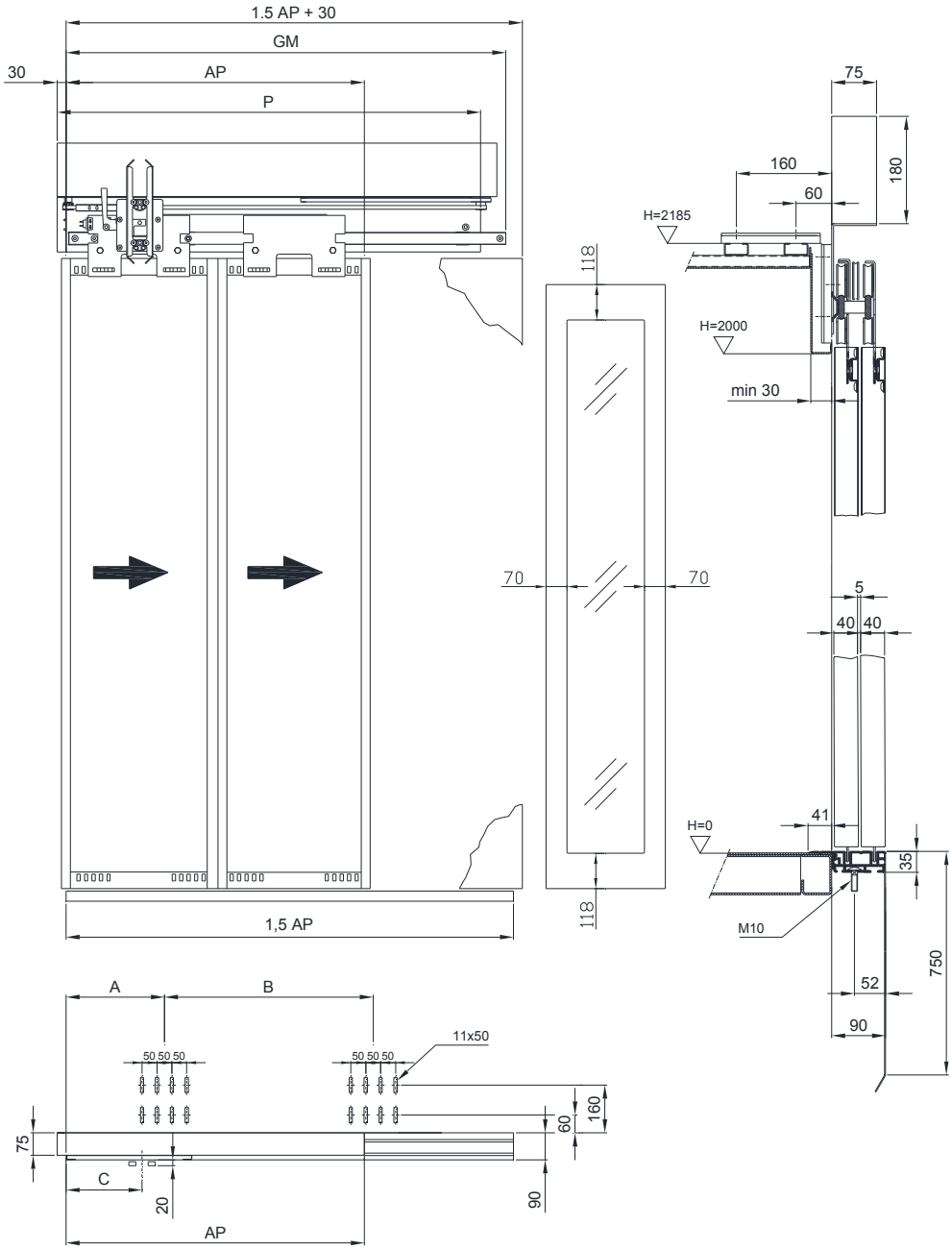

AP [MM]	700	750	800	850	900	1000*
GM [MM]	1050	1100	1200	1250	1300	1475
A [MM]	205					330
B [MM]	605					700
C [MM]	180		230			180
P [MM]	1045					1420
WEIGHT [KG]#	70	70	70	70	75	85
WEIGHT [KG]# (WITH GLASS PANELS)	90	95	95	100	105	115

* Not standard execution
\# The weight includes: operator, car doors, sills, apron and accessories.

© 05.06.2013 – Rev.:05.06.2013.09.15 (J2)

5.5.1.2 OPERATOR AND DOOR 2AT SILL 70

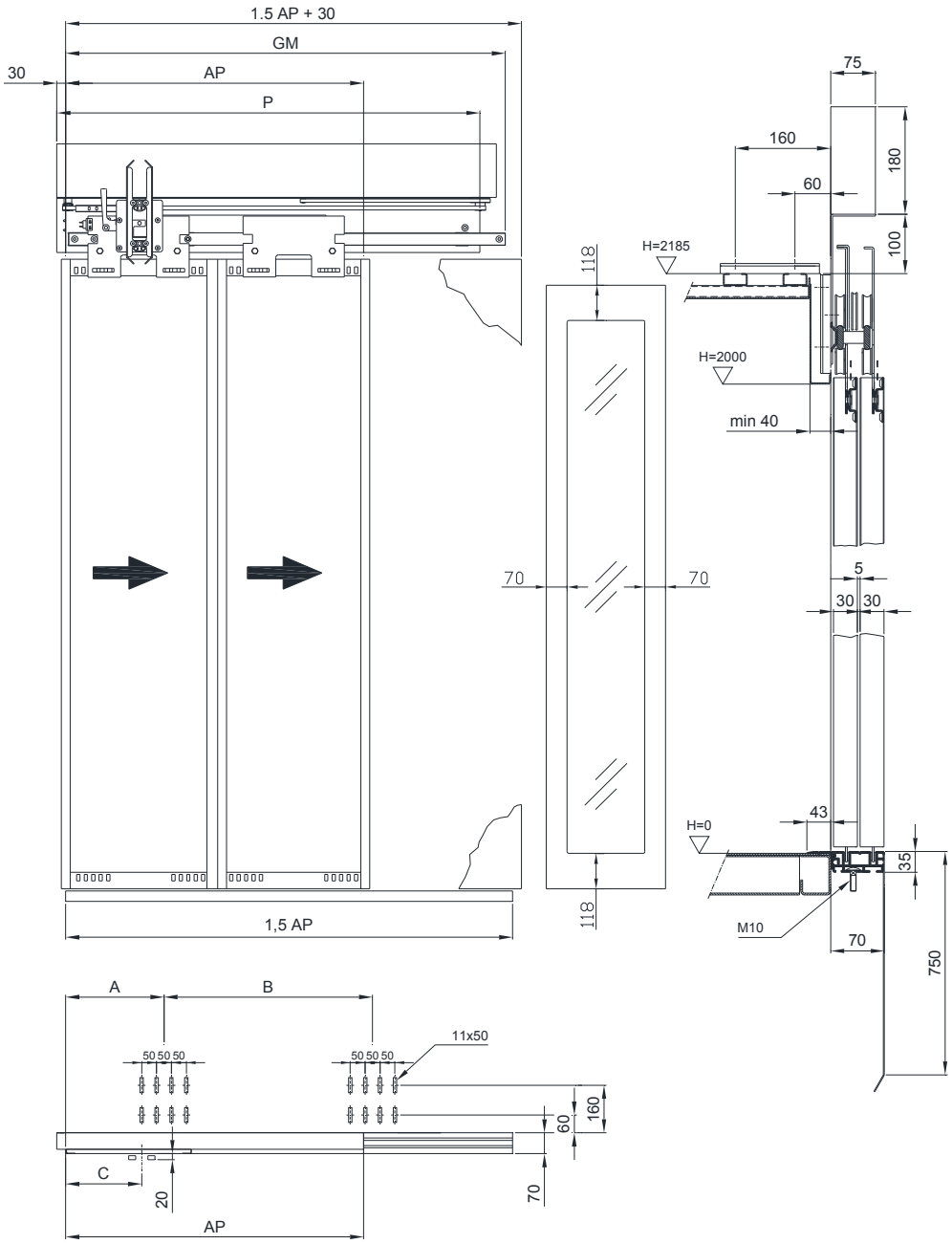

AP [MM]	700	750	800	850	900	1000*
GM [MM]	1050	1100	1200	1250	1300	1475
A [MM]	205					330
B [MM]	605					700
C [MM]	180		230			180
P [MM]	1045					1420
WEIGHT [KG]#	70	70	70	70	75	85
WEIGHT [KG]# (WITH GLASS PANELS)	90	95	95	100	105	115

* Not standard execution
\# The weight includes: operator, car doors, sills, apron and accessories.

© 05.06.2013 – Rev.:05.06.2013.09.15 (J2)

5.5.1.3 OPERATOR AND DOOR 3AT SILL 105

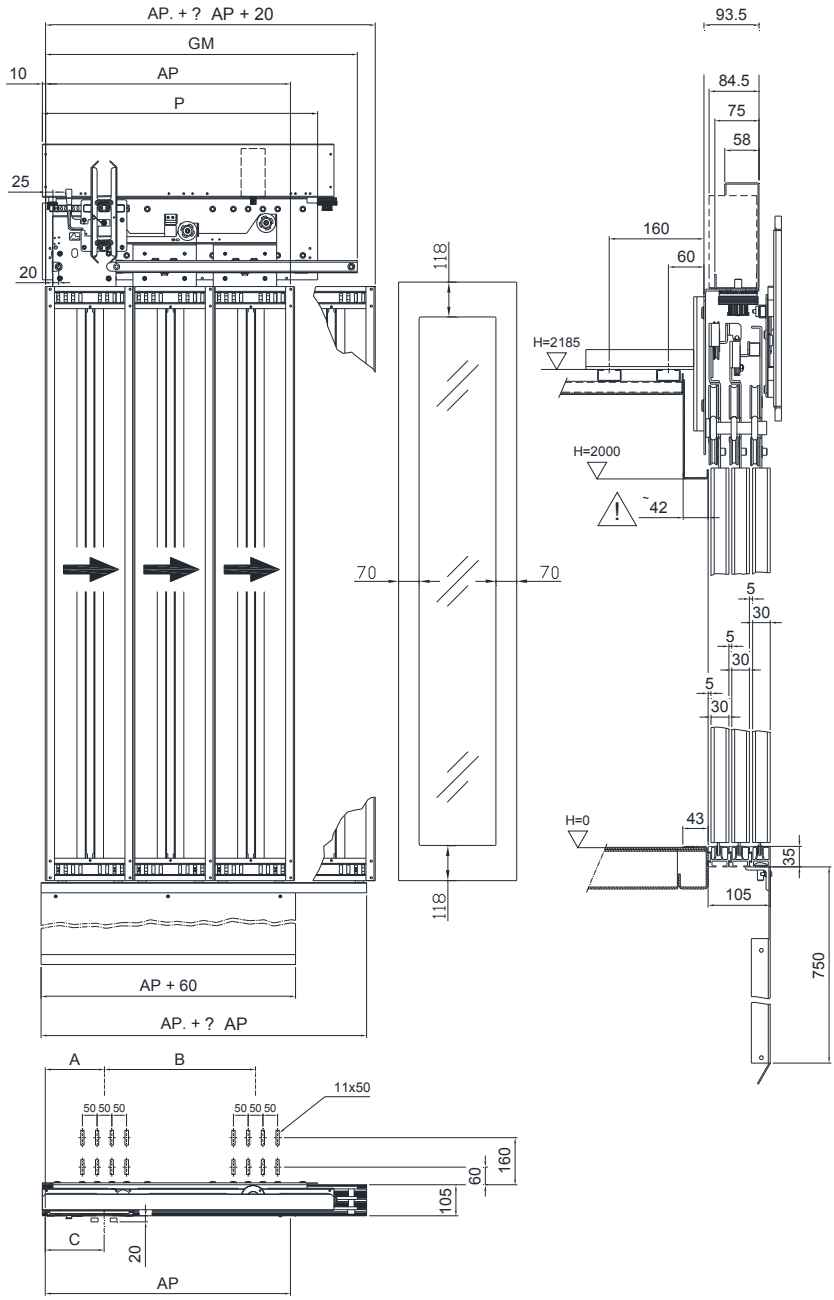

AP [MM]	700	750	800	850	900	1000*
GM [MM]	930	980	1030	1161	1211	1361
A [MM]	205					205
B [MM]	560			660		860
C [MM]	180		180			180
P [MM]	932			1082		1282
WEIGHT [KG]#	70	70	70	70	75	85
WEIGHT [KG]# (WITH GLASS PANELS)	90	95	95	100	105	115

* Not standard execution
\# The weight includes: operator, car doors, sills, apron and accessories.

5.5.2 CENTRAL OPERATOR AND CAR DOOR

5.5.2.1 OPERATOR AND DOOR 2AO SILL 75

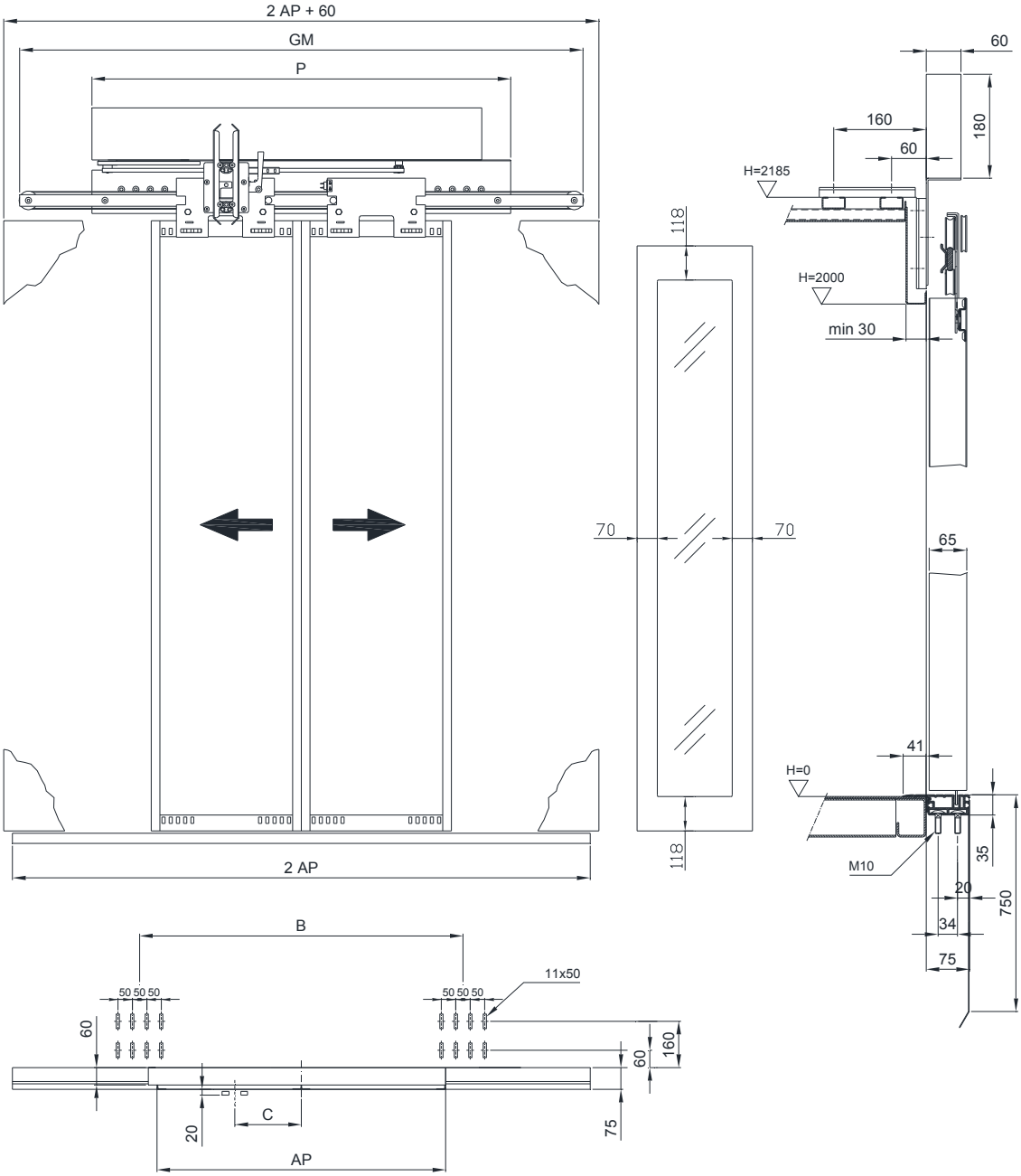

AP [MM]	700	750	800	850	900	1000*
GM [MM]	1400	1450	1500	1650	1700	1950
B [MM]	820	870	920	970	1020	1120
C [MM]	180		230			180
P [MM]	1200					1450
WEIGHT [KG]#	70	70	70	70	75	85
WEIGHT [KG]# (WITH GLASS PANELS)	90	95	95	100	105	115

* Not standard execution
\# The weight includes: operator, car doors, sills, apron and accessories.

© 05.06.2013 – Rev.:05.06.2013.09.15 (J2)

5.5.3 FOLDING OPERATOR AND CAR DOOR

5.5.3.1 DOOR WITH OR WITHOUT WINDOWS

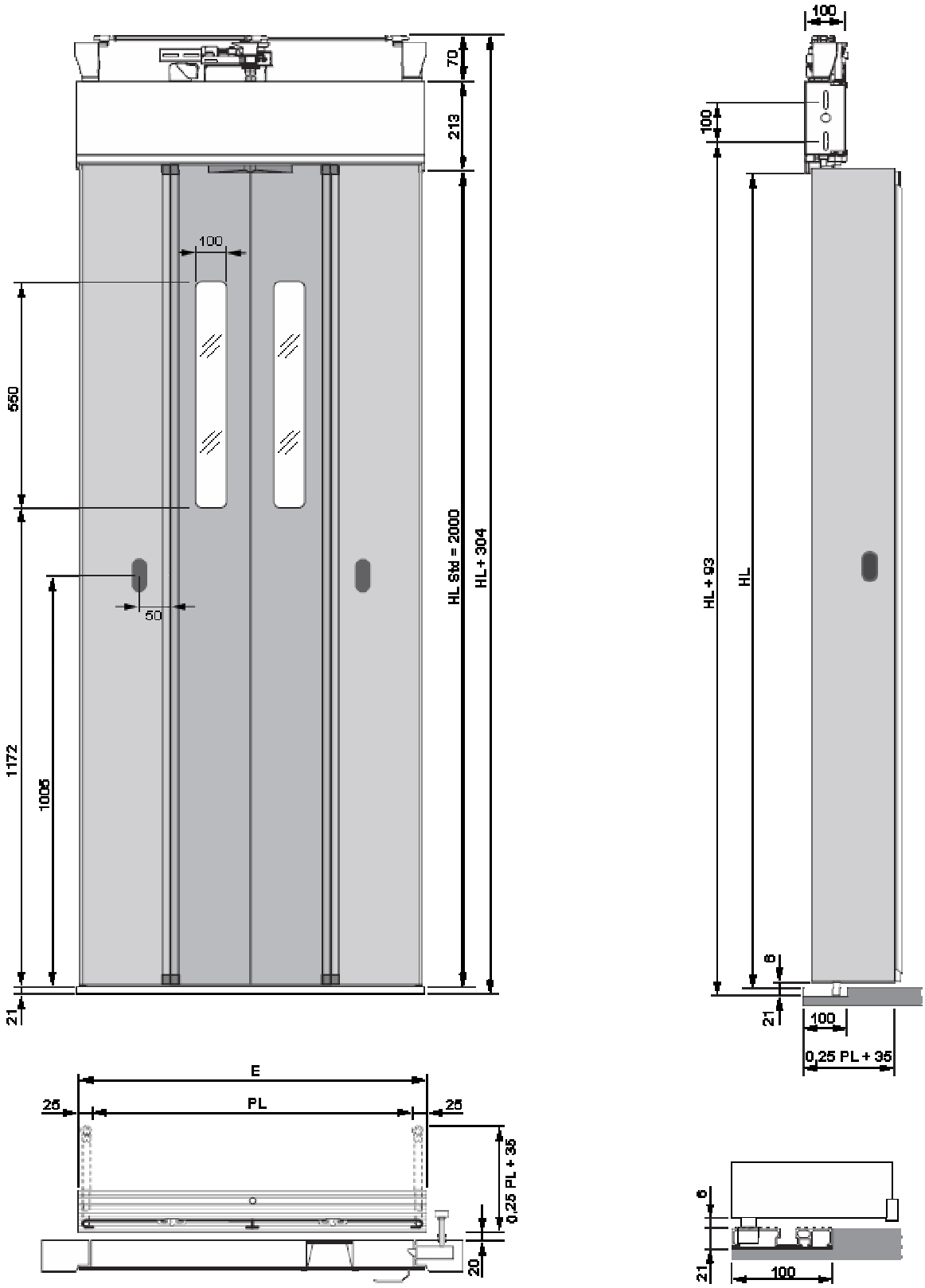

PL [MM]	700	750	800	850	900
E [MM]	750	800	850	900	950
WEIGHT [KG]#	46	48	50	52	54

The weight includes: operator, car doors, sills, apron and accessories.

© 05.06.2013 – Rev.:05.06.2013.09.15 (J2)

5.5.3.2 PANORAMIC DOOR

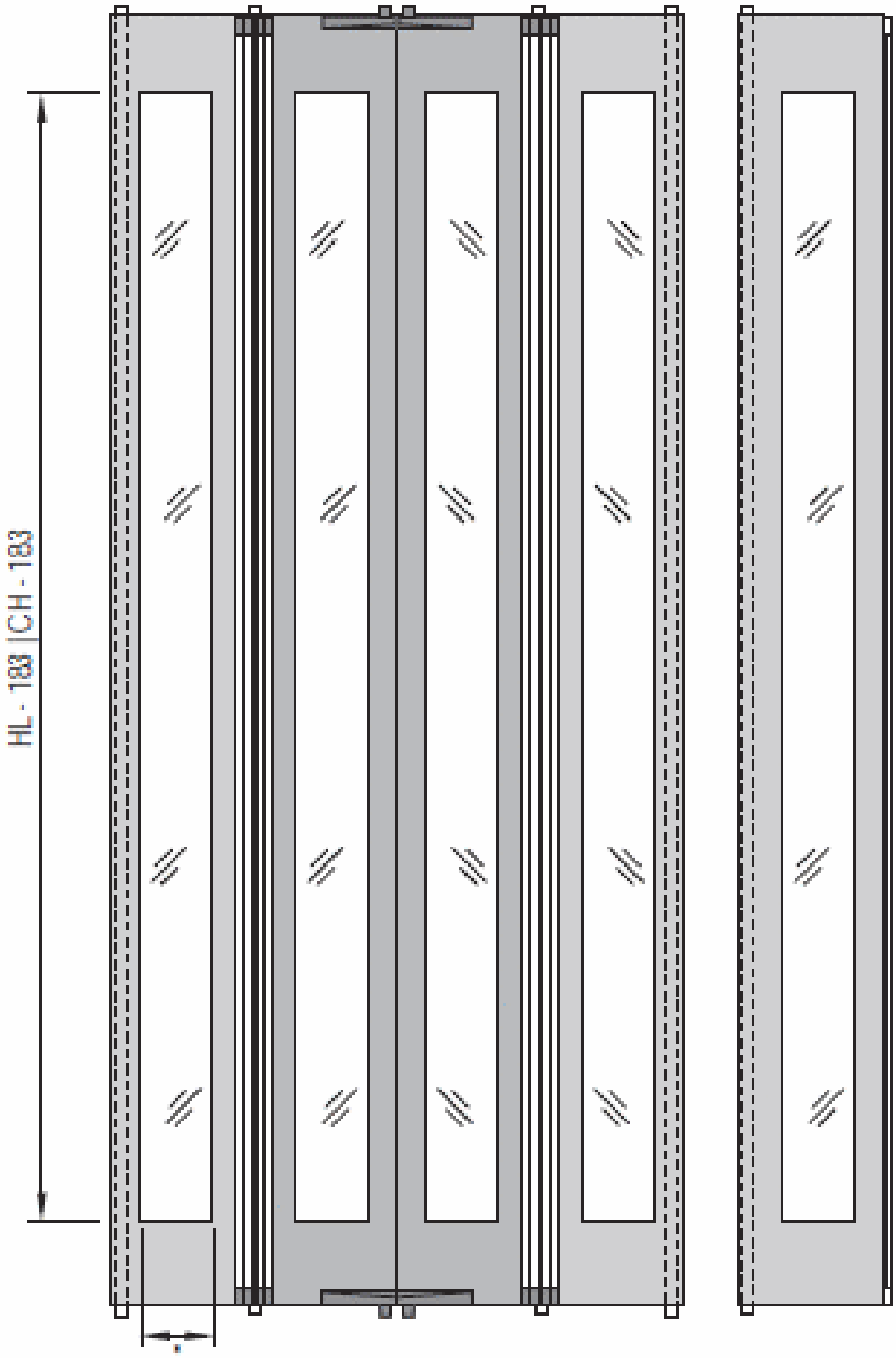

PL [MM]	700	750	800	850	900
E [MM]	750	800	850	900	950
WEIGHT [KG] # (WITH GLASS PANELS)	46	48	50	52	54

The weight includes: operator, car doors, sills, apron and accessories.

© 05.06.2013 – Rev.:05.06.2013.09.15 (J2)

5.6 LANDING DOORS TECHNICAL SPECIFICATIONS

5.6.1 STANDARD TELESCOPIC DOORS

5.6.1.1 DOOR 2AT SILL 90

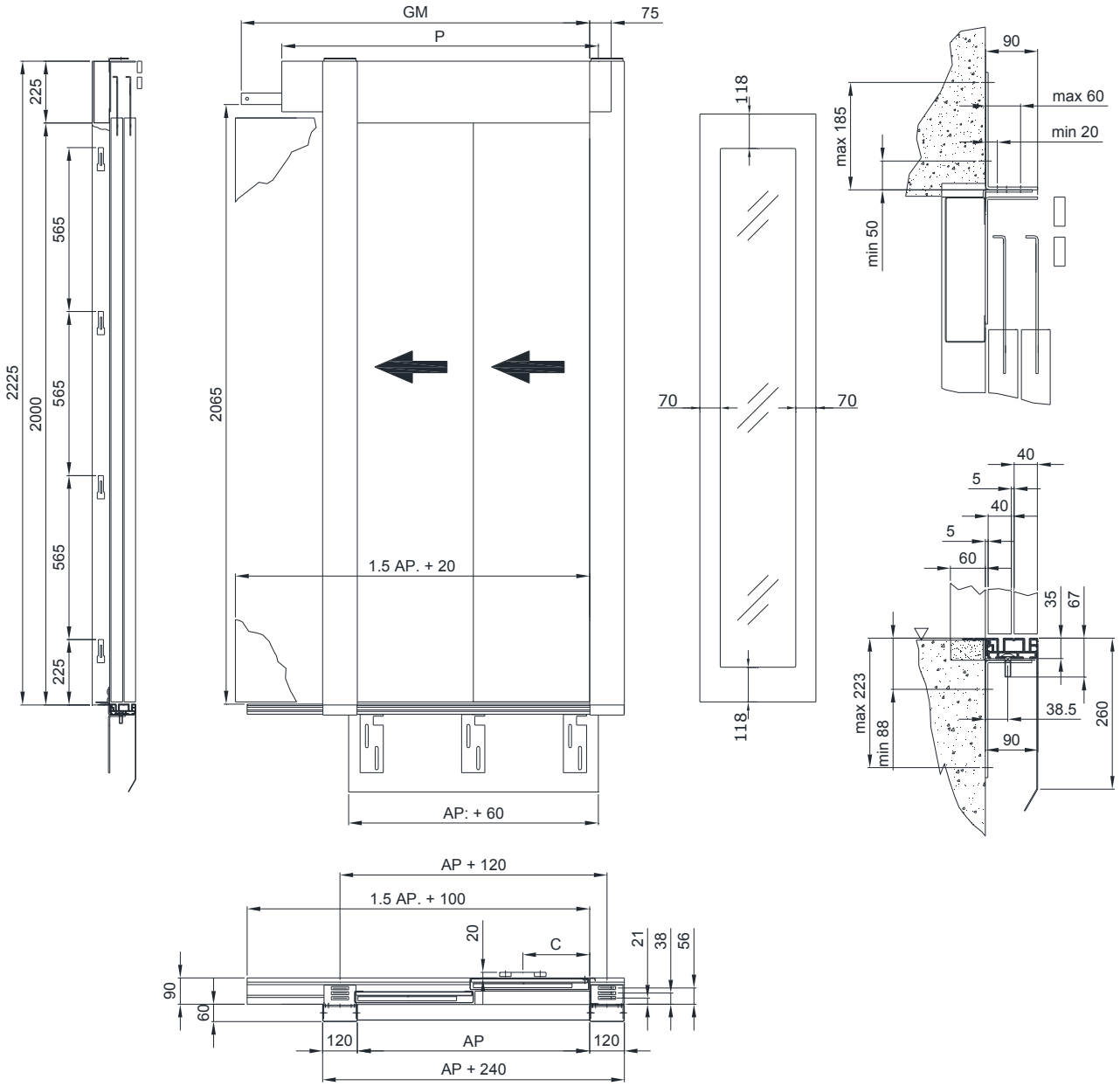

AP [мм]	700	750	800	850	900	1000*
GM [мм]	1050	1100	1200	1250	1300	1475
C [мм]	180		230			180

* Not standard execution

5.6.1.2 DOORS 2AT SILL 70

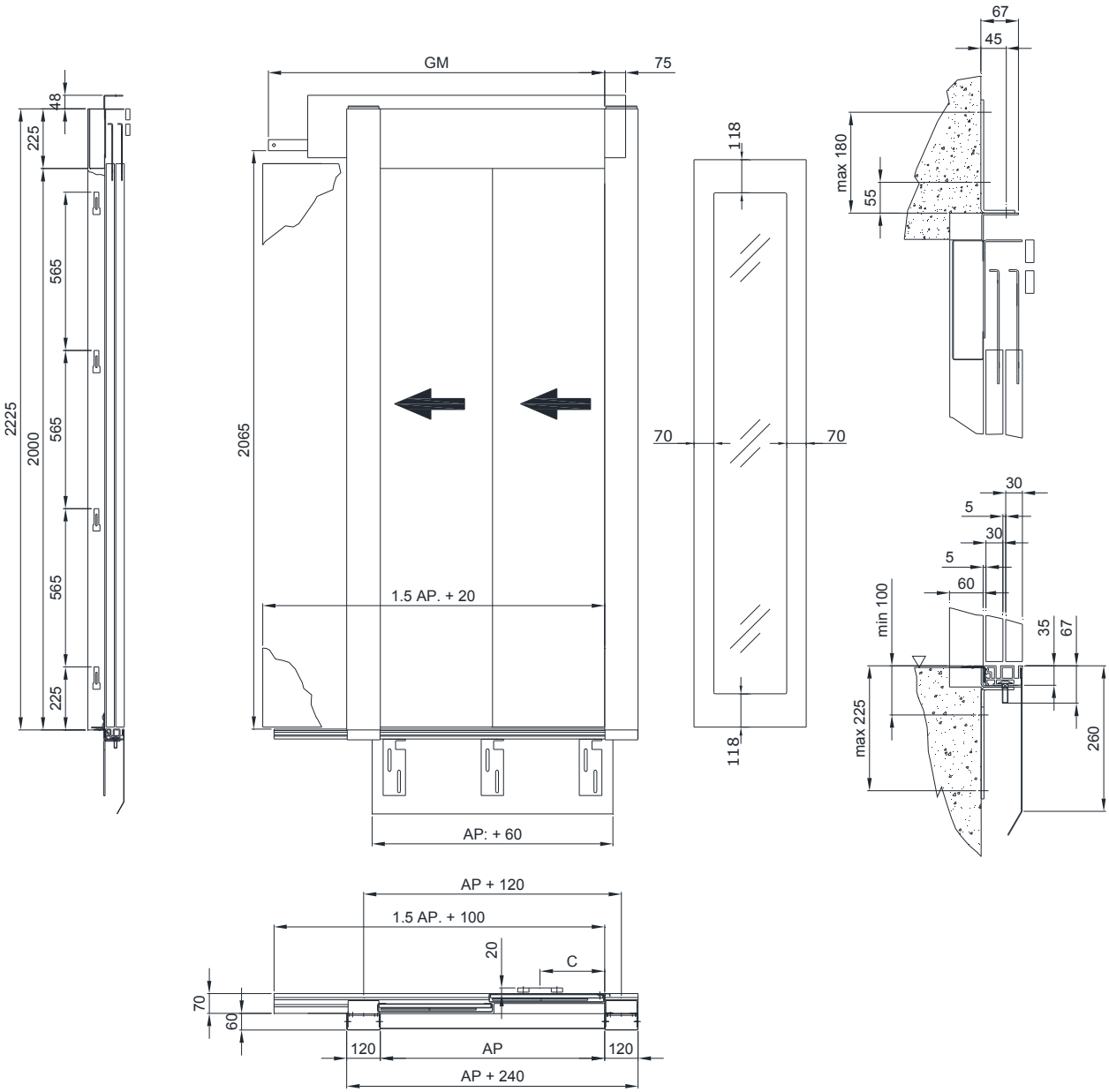

AP [мм]	700	750	800	850	900	1000*
GM [мм]	1050	1100	1200	1250	1300	1475
C [мм]	180		230			180

* Not standard execution

© 05.06.2013 – Rev.:05.06.2013.09.15 (J2)

5.6.1.3 DOORS 3AT SILL 105

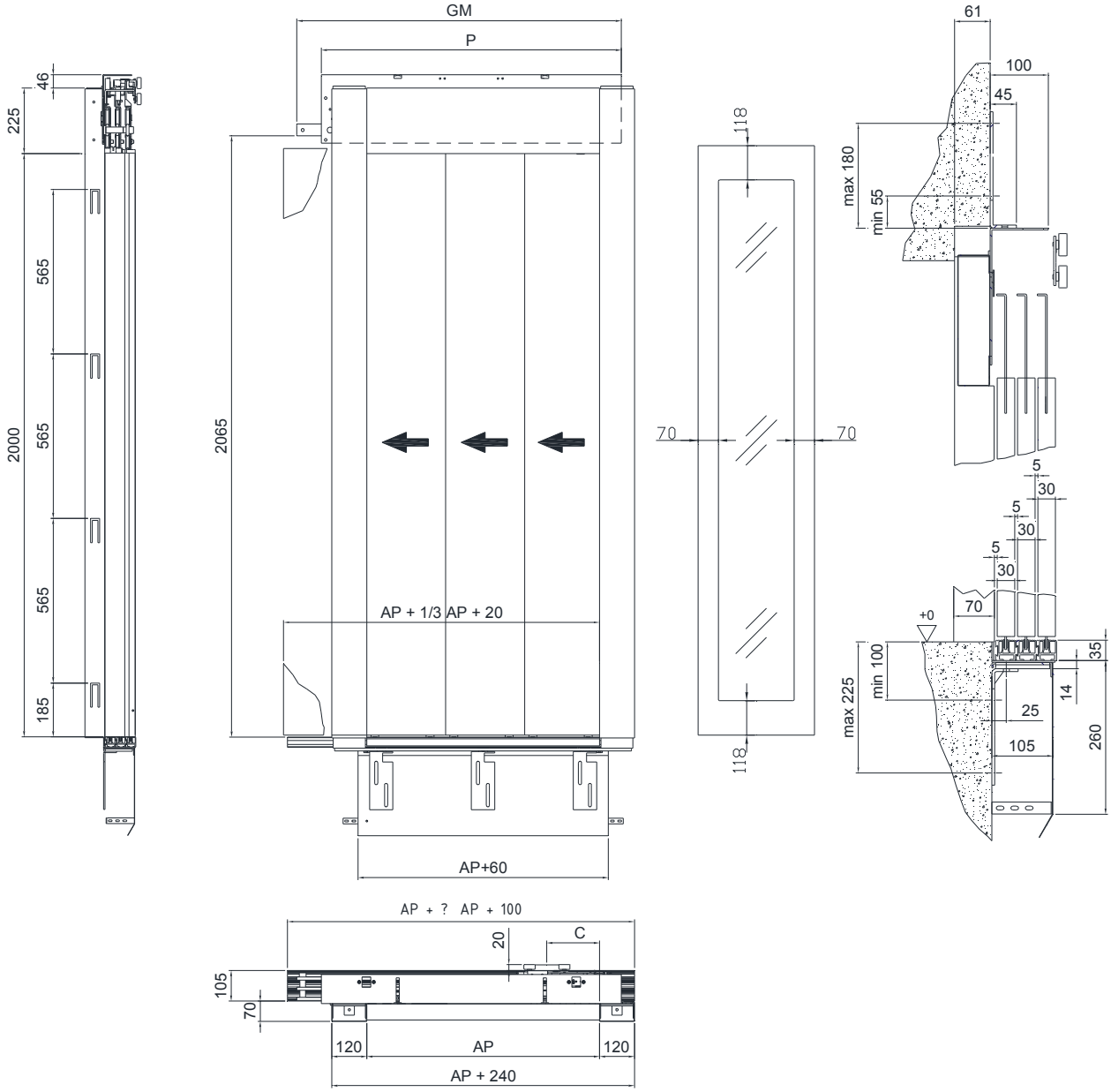

AP [мм]	700	750	800	850	900	1000*
GM [мм]	1015	1065	1115	1221	1271	1421
P [мм]	1032			1182		1382
C [мм]	180		180			180

* Not standard execution

5.6.2 STANDARD CENTRAL DOORS

5.6.2.1 DOORS 2AO SILL 75

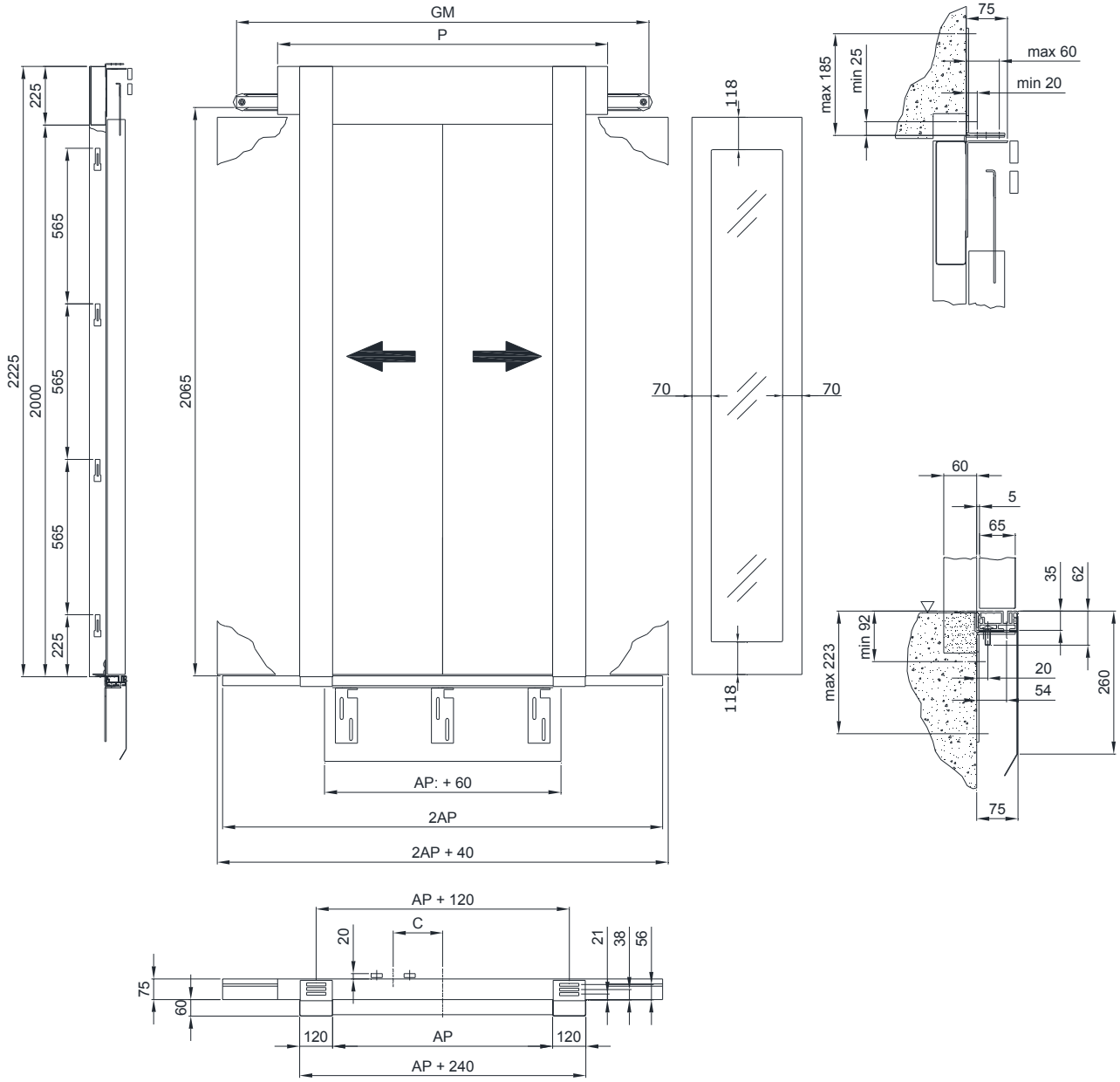

AP [мм]	700	750	800	850	900	1000*
GM [мм]	1400	1450	1500	1650	1700	1950
C [мм]	180		230			180

* Not standard execution

5.6.3 HINGED DOORS

5.6.3.1 DOORS 1BM MANUAL WITH OR WITHOUT WINDOWS

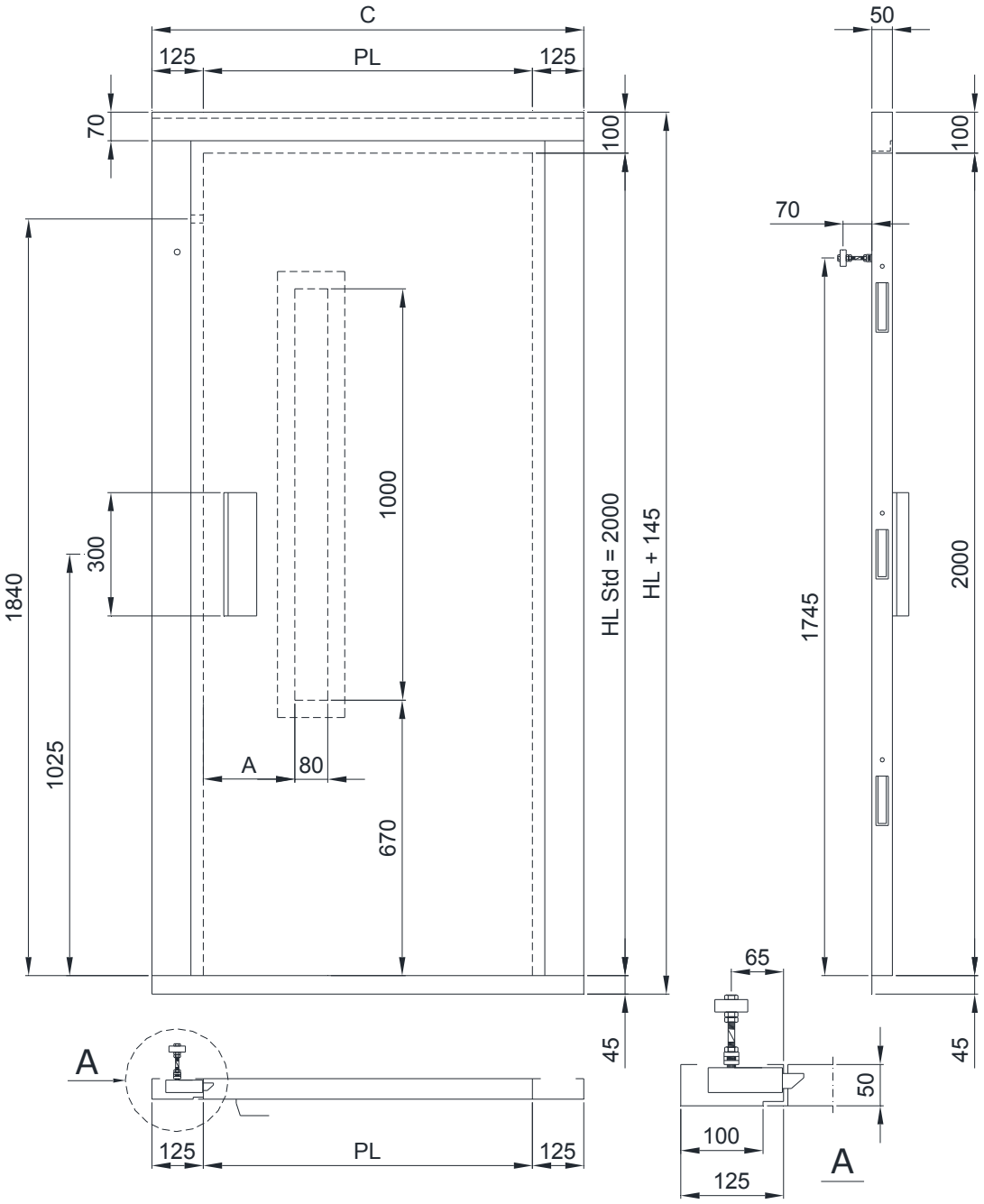

PL [MM]	700	750	800	850	900
A [MM]	155	165	180	190	205
C [MM]	950	1000	1050	1100	1150
WEIGHT [KG]	51	54	56	59	61

© 05.06.2013 – Rev.:05.06.2013.09.15 (J2)

5.6.3.2 DOORS 1BM MANUAL PANORAMIC

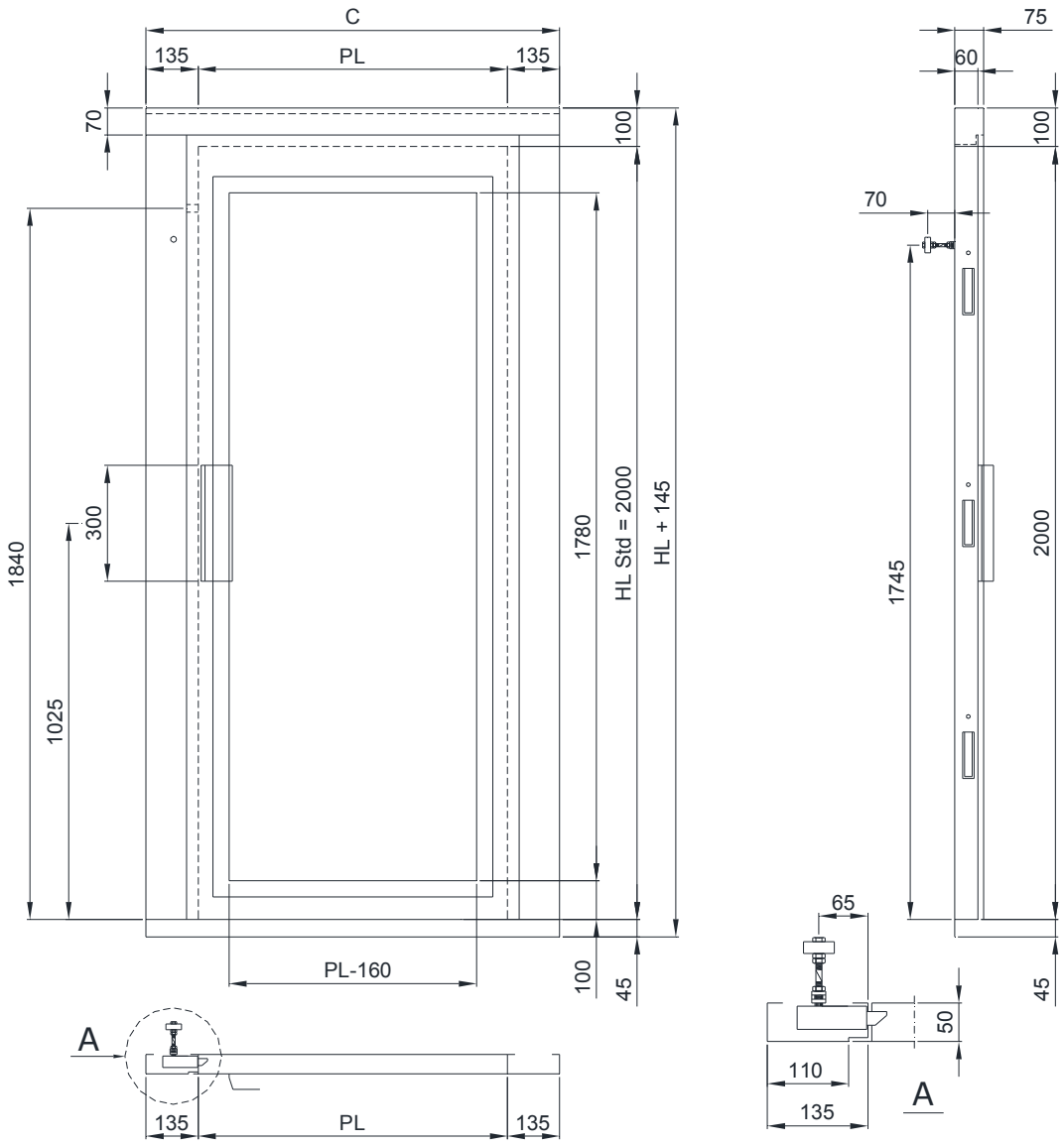

PL [MM]	700	750	800	850	900
C [MM]	950	1000	1050	1100	1150
WEIGHT[KG]	51	54	56	59	61

5.6.3.3 DOORS 1BA AUTOMATED

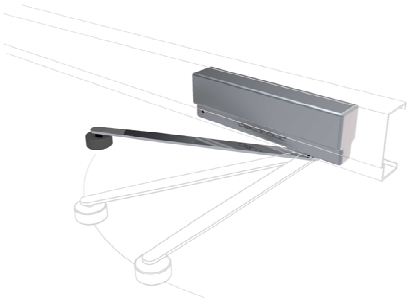

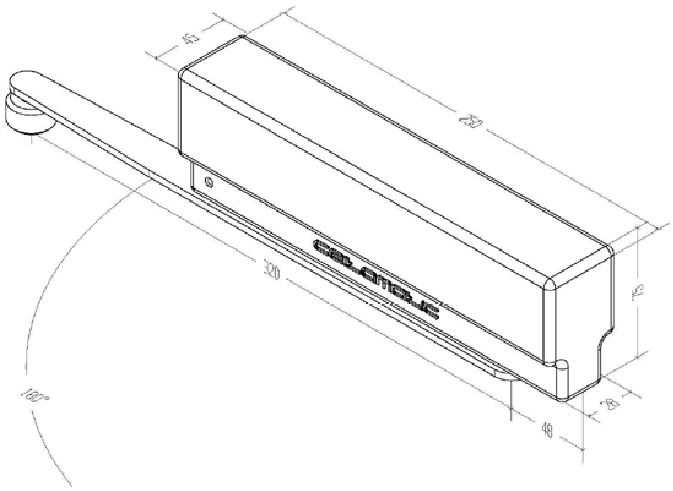

5.6.4 FIRERATED TELESCOPIC DOORS EN 81-58 - 2AT SILL 90

5.6.4.1 DOORS E 120

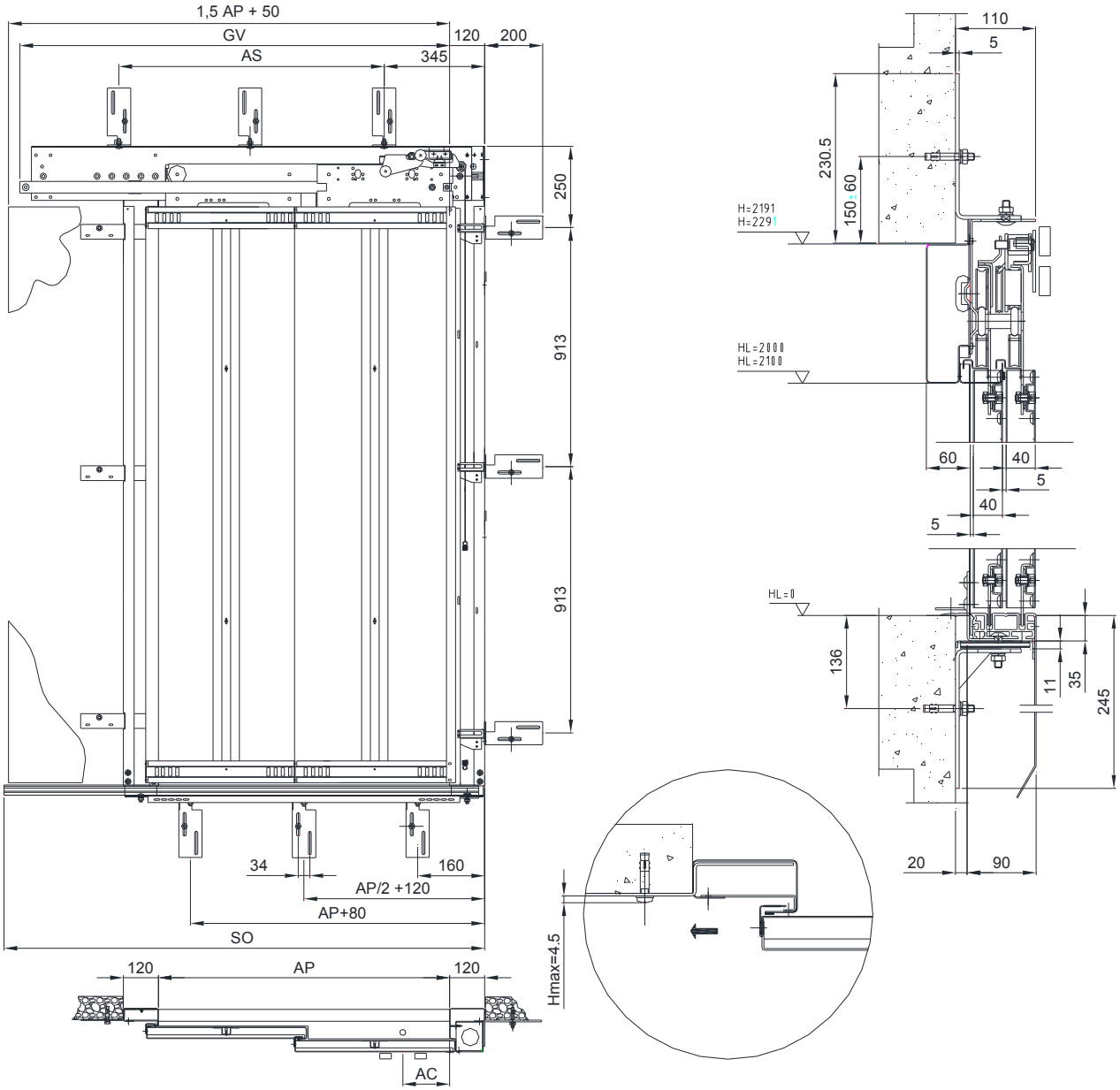

AP [MM]	700	750	800	850	900	1000*
GV [MM]	1050	1100	1200	1250	1300	1475
SO [MM]	1150	1225	1300	1375	1450	1600
AS [MM]	535					910
AC [MM]	180		230			180

* Not standard execution

© 05.06.2013 – Rev.:05.06.2013.09.15 (J2)

5.6.4.2 DOORS EI 30

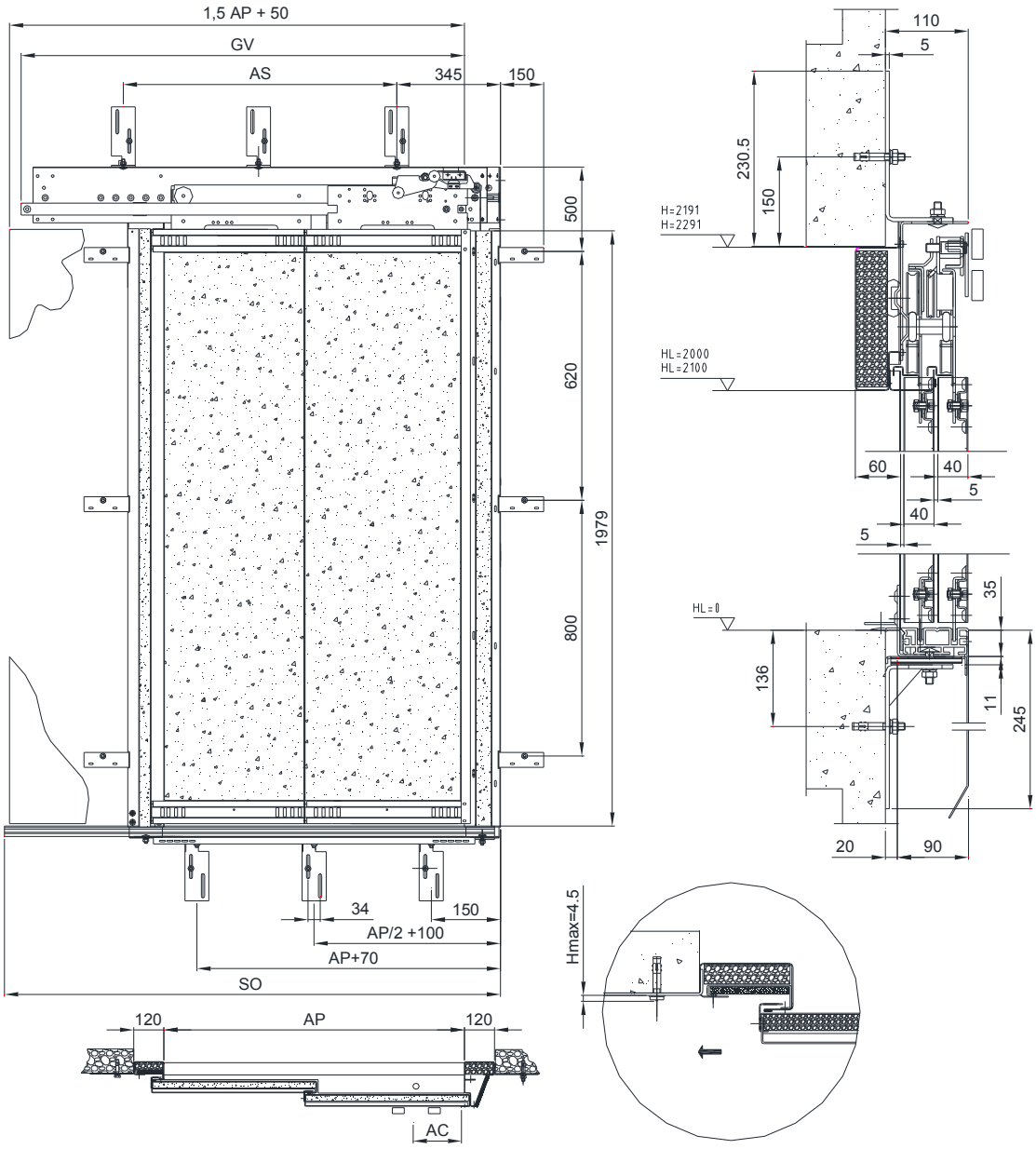

AP [MM]	700	750	800	850	900	1000*
GV [MM]	1050	1100	1200	1250	1300	1475
SO [MM]	1150	1225	1300	1375	1450	1600
AS [MM]	535					910
AC [MM]	180		230			180

* Not standard execution

5.6.4.3 DOORS EI 60, EI 90, EI 120

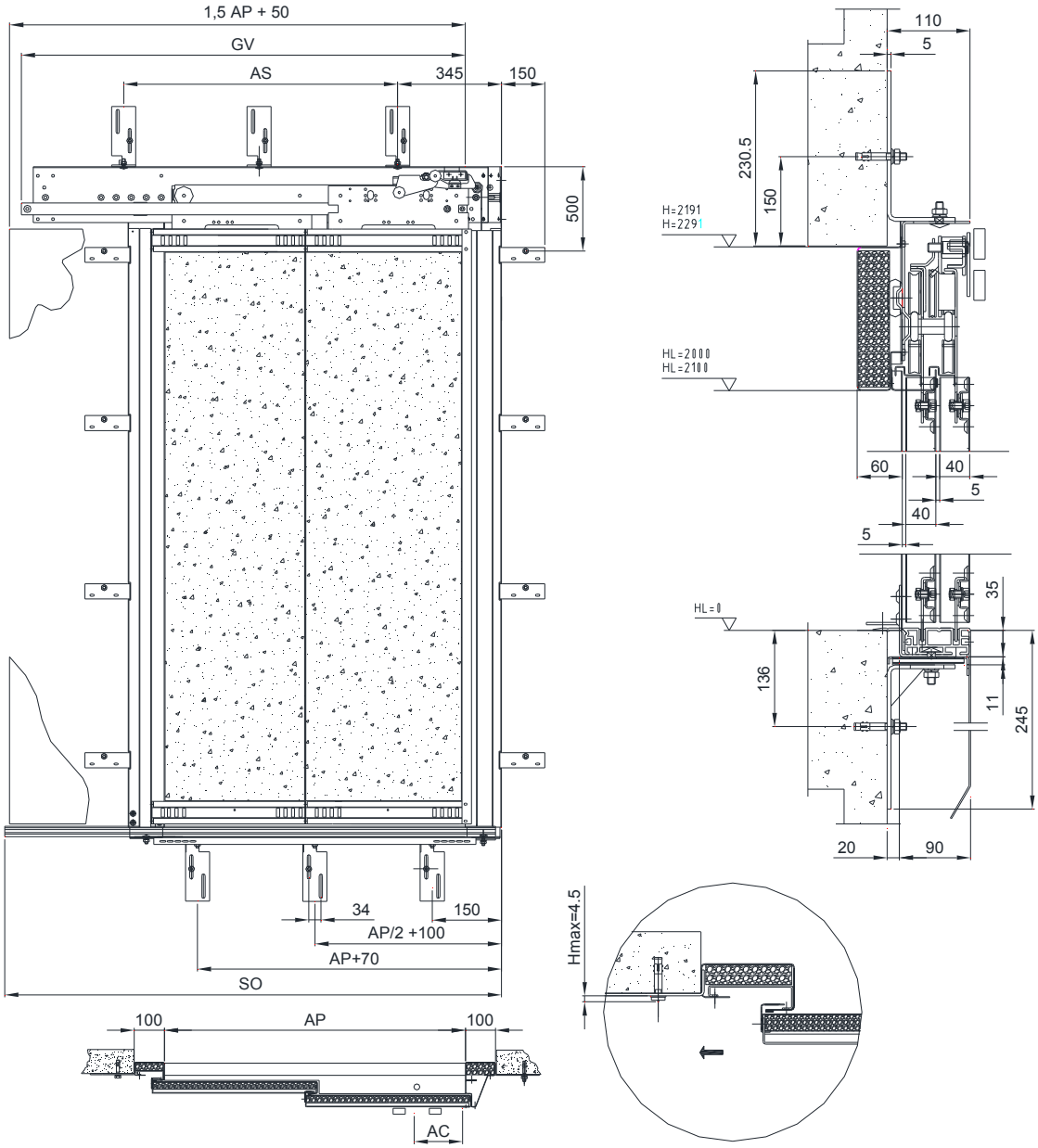

ATTENTION !
Width of the frame uprights 100 mm

AP [MM]	700	750	800	850	900	1000*
GV [MM]	1050	1100	1200	1250	1300	1475
SO [MM]	1150	1225	1300	1375	1450	1600
AS [MM]	535					910
AC [MM]	180		230			180

* Not standard execution

© 05.06.2013 – Rev.:05.06.2013.09.15 (J2)

5.7 FIRERATED DOORS "FRANCE" - 2AT SILL 90

5.7.1.1 DOORS E 60

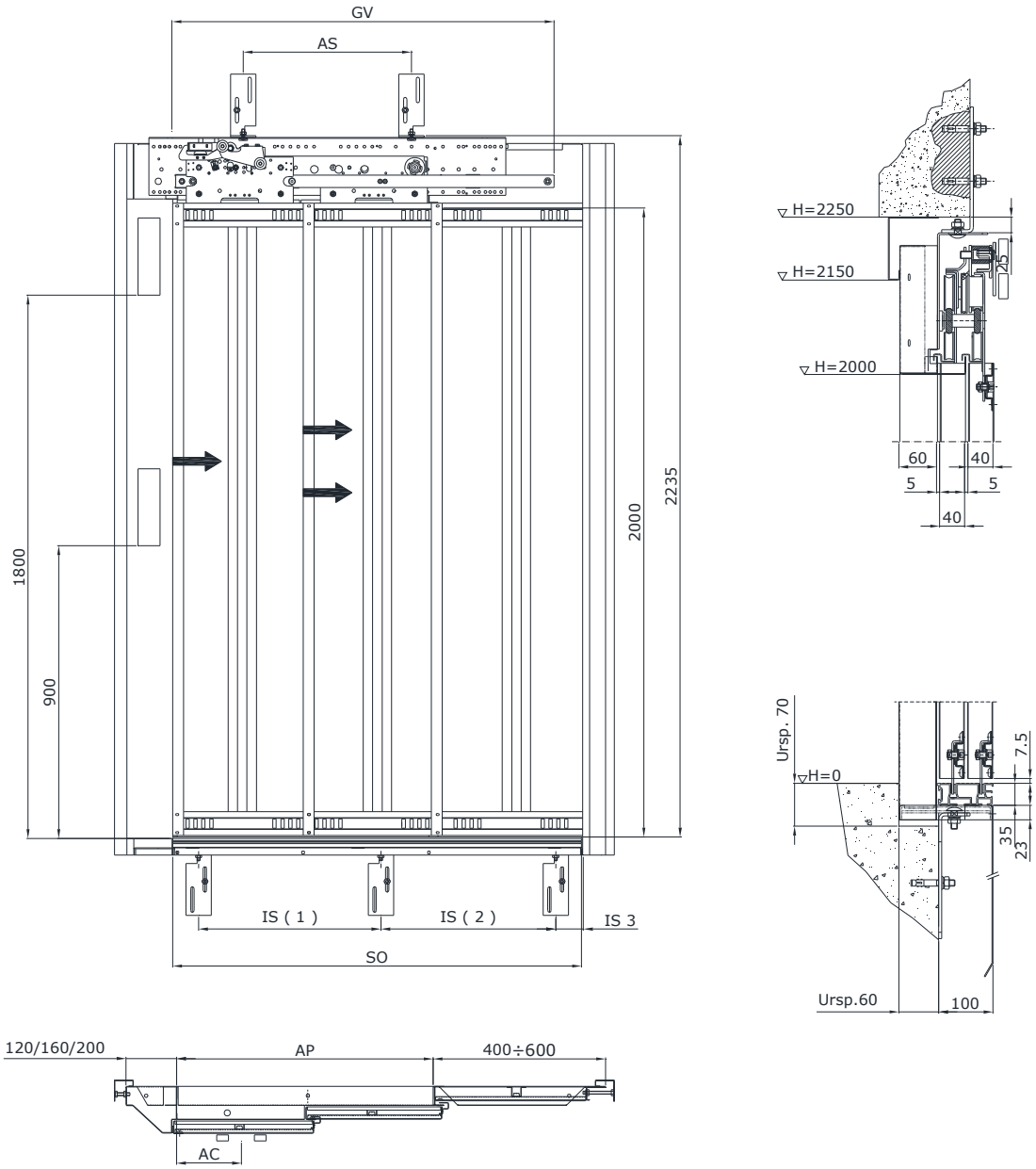

AP [MM]	700	750	800	850	900	1000*
GV [MM]	1050	1100	1200	1250	1300	1475
SO [MM]	1150	1225	1300	1375	1450	1600
AS [MM]	535					910
AC [MM]	180		230			180

* Not standard execution

© 05.06.2013 – Rev.:05.06.2013.09.15 (J2)

6 ELECTRICAL

6.1 MAIN ELECTRICAL LINES

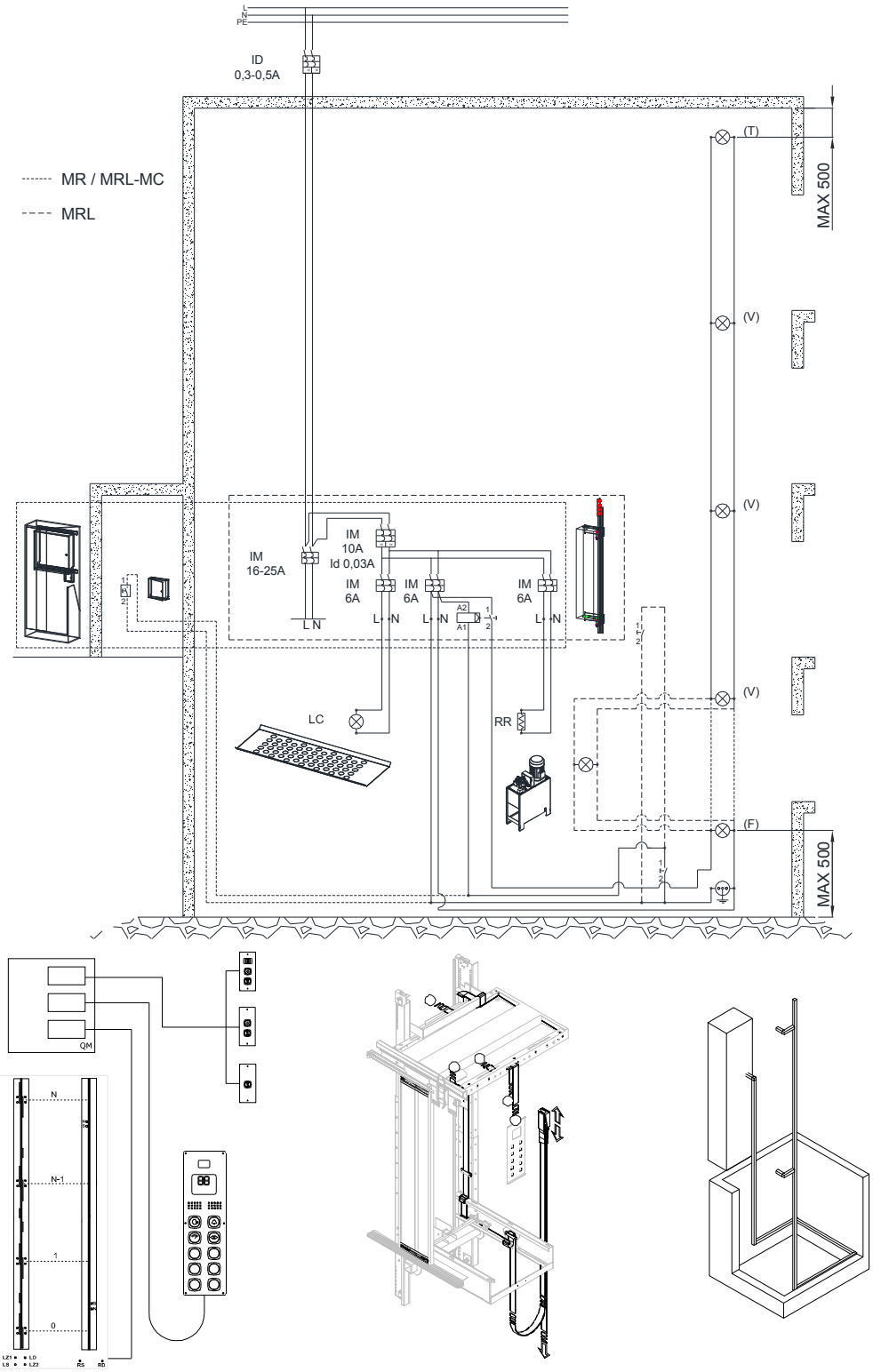

6.1.1 MAIN OPTIONS

COMPONENTS	Q.TY STANDARD	DM 2006/42/CE	EN 81.41	EN 81.70
Light in cabinet	1	●	●	●
Main power panel	1	●	●	●
Emergency return at landing	1	○	○	○
Startup button panel (cod.EN1003-9D99)	1	○	○	○

6.2 PUSH-BUTTON PANELS

6.2.1 CAR OPERATION PANEL

6.2.1.1 MODEL

Vertical column	●	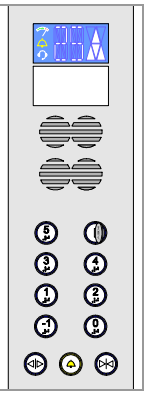

6.2.1.2 MAIN CAR OPERATION PANEL

COMPONENTS	Q.TY STANDARD	DM 2006/42/EC	EN 81.41	EN 81.70
Call push-button	1 x service			
Standard	□	●	●	⊘
with sound (buzzer)	□	○	○	●
Braille	□	●	●	●
main floor green and raised	□	○	○	●
Stop push-button - only if car without doors	1	●	●	⊘
Open doors push-button - only if car with automatic doors	1	●	⊘	●
Close doors push-button - only if car with automatic doors	1	○	⊘	●
Key switch	On request	○	○	○
Display LCD Tricolor	1	●	●	●
Signal : Alarm received	1	●	●	●
Signal : Alarm sent	1	●	●	●
Signal : Overload	1	●	●	●
Rated load plate with customer logo	1	●	●	●
Emergency light	1	●	●	●
Device to ask help	See § 6.3	●	●	●
Intercom car-control panel	1	○	○	○
Vocal synthesizer	1	○	○	●
Inductive ring	1	○	○	○
Timer for car light	1	●	●	●

6.2.1.3 SECONDARY CAR OPERATION PANEL

COMPONENTS	Q.TY STANDARD	DM 2006/42/EC	EN 81.41	EN 81.70
Call push-button				
Standard		●	●	⊘
with sound (buzzer)	1 x service	○	○	●
braille		●	●	●
main floor green and raised		○	○	●
Stop push-button - only if car without doors	1	●	●	⊘
Open doors push-button - only if car with automatic doors	1	●	⊘	●
Close doors push-button - only if car with automatic doors	1	○	⊘	●
Key switch	On request	○	○	○

© 05.06.2013 – Rev.:05.06.2013.09.15 (J2)

6.2.2 LANDING PUSH-BUTTON PANELS

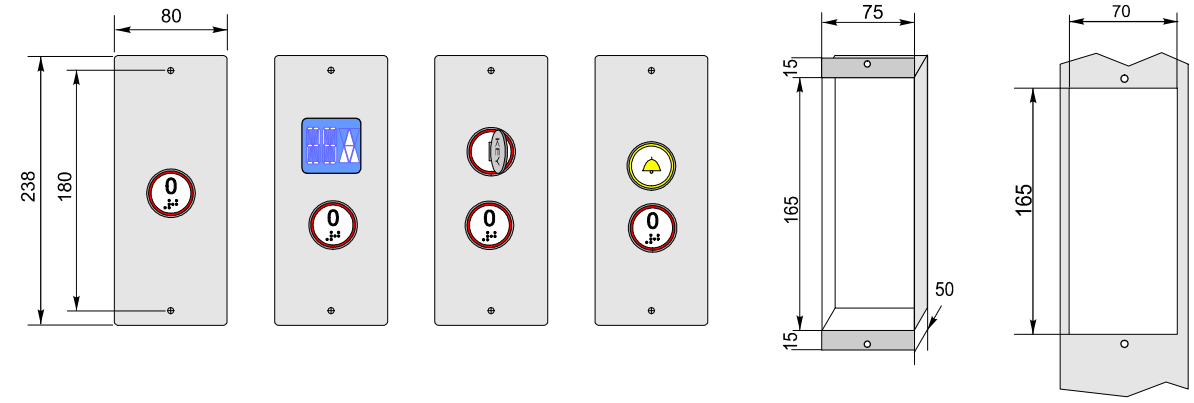

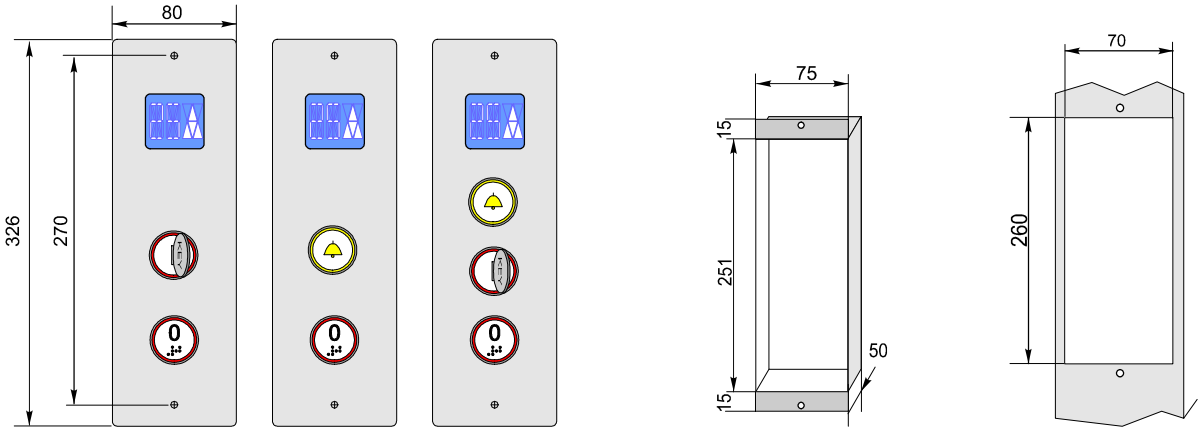

6.2.2.1 MAIN FLOOR

COMPONENTS		Q.TY STANDARD	DM 2006/42/EC	EN 81.41	EN 81.70
Call push-button :	standard	1	●	●	⊘
	with buzzer		○	○	●
	braille		●	●	●
Key switch		1	○	○	○
Display Lcd Monochrome with arrows - in the push-button panel		1	○	○	⊘
- in separate panel		1	○	○	○
Signal : Alarm		1	○	○	○
Signal : at landing - only with hinged doors		1	●	●	⊘
Customer logo		1	○	○	○

6.2.2.2 OTHER FLOORS

COMPONENTS		Q.TY STANDARD	DM 2006/42/EC	EN 81.41	EN 81.70
Call push-button :	standard	1	●	●	⊘
	With buzzer		○	○	●
	braille		●	●	●
Key switch		1	○	○	○
Display Lcd Monochrome with arrows - in the push-button panel		1	○	○	⊘
- in separate panel		1	○	○	○
Signal : Alarm		1	○	○	○
Signal : at landing - only with hinged doors		1	●	●	⊘
Customer logo		1	○	○	○

Legend : ◆ Available ● Standard ○ Optional ⊘ Not Available

© 05.06.2013 – Rev.:05.06.2013.09.15 (J2)

6.2.2.3 HOLES AND BOX TO BE WALLED

BOX	HOLE	DM 2006/42/CE	EN 81.41	EN 81.70
Standard (15 +15) + 165 x 75 x 50	165 x 70	●	●	●
Plus (15 +15) + 251 x 75 x 50	260 x 70	○	○	○

6.2.3 DISPLAY IN SEPARATED PLATE

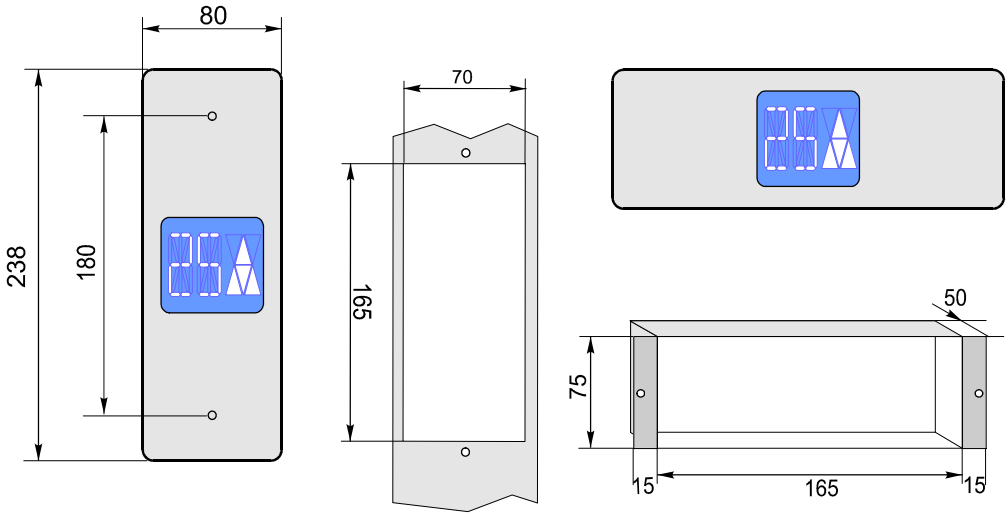

6.3 DEVICE TO ASK HELP

DEVICE	Q.TY	TELEPHONE LINE	
		DEDICATED	SHARED
Telephone line switch PSTN (Require one of the following devices)	1	⊘	●
Telephone PSTN (not supplied)	1	○	○
Autodialer PSTN + bi-directional intercom		○	○
Autodialer GSM + bi-directional intercom		○	⊘
Arrangement for autodialer provided by the customer		○	○

6.4 CABINET FOR CONTROL PANEL

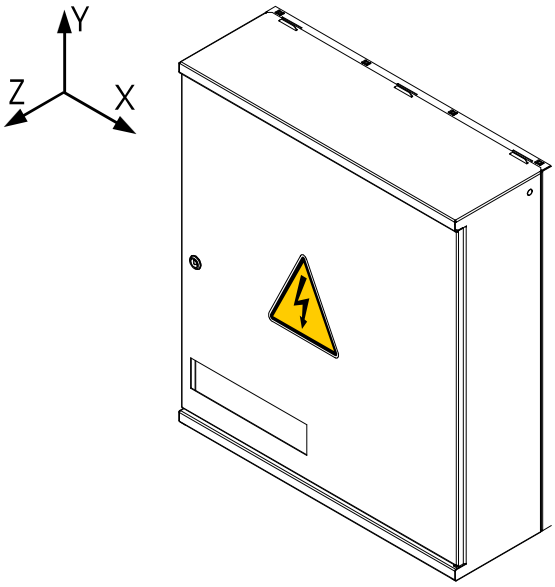

ARMADIO	MR [MM]	MC [MM]
X	575	575
Y	650	450
Z	210	-

Legend : ◆ Available ● Standard ○ Optional ⊘ Not Available

© 05.06.2013 – Rev.:05.06.2013.09.15 (J2)

7 SAFETY DEVICES

7.1 SAFETY DEVICE IN PIT

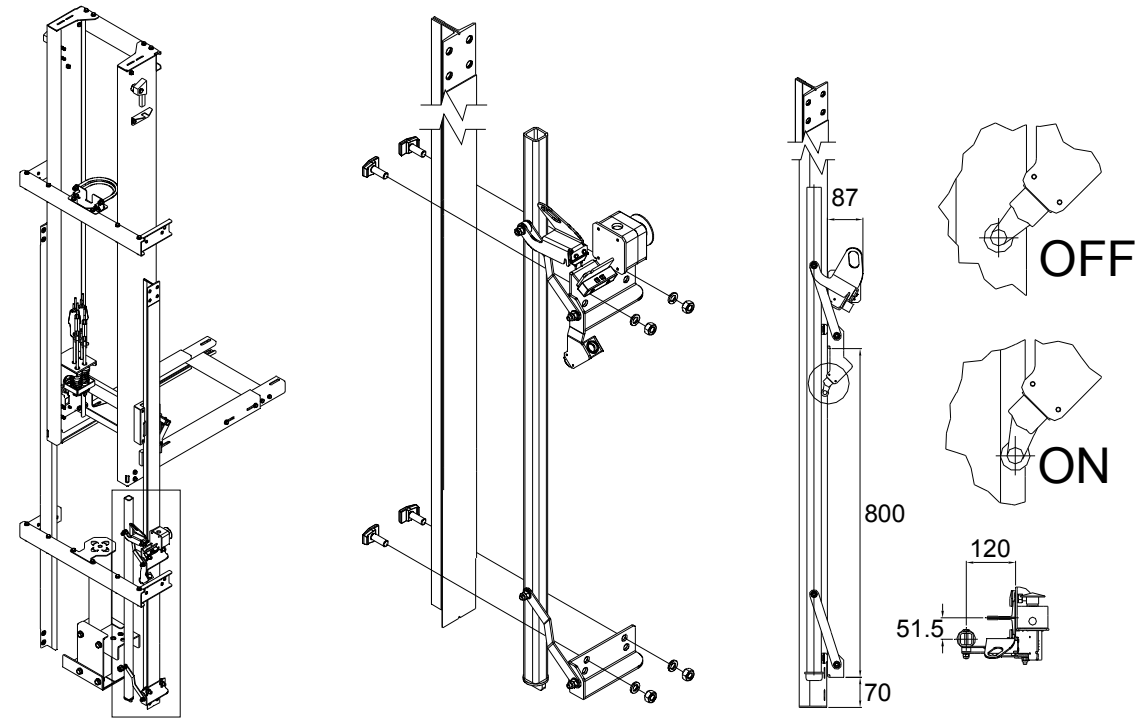

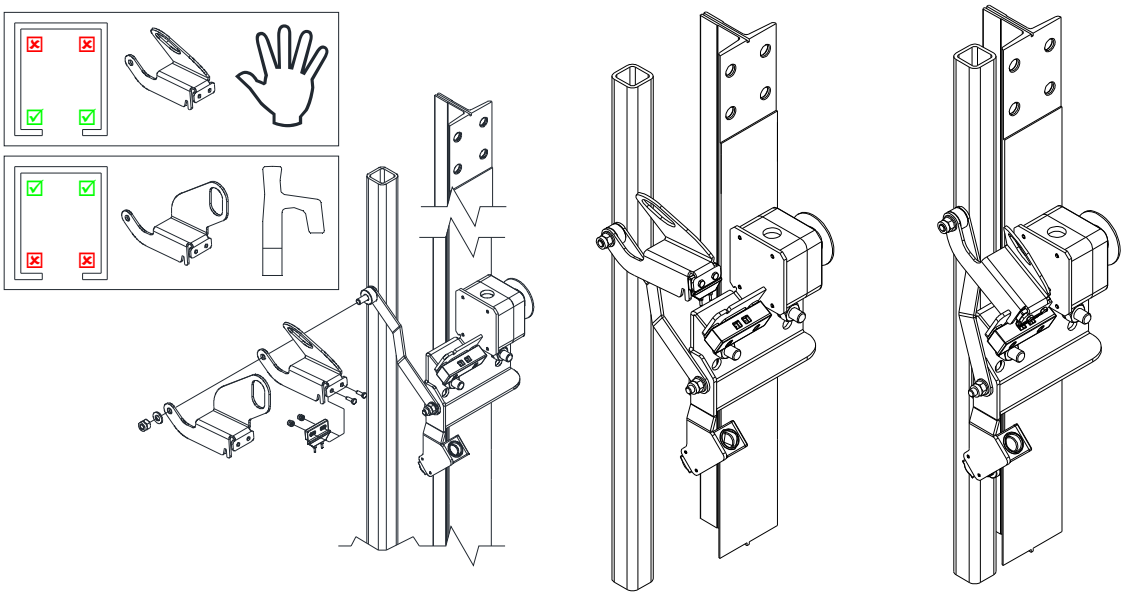

Il dispositivo di blocco cabina inferiore per HLDM (LCSMD HLDM) è obbligatorio per poter accedere alla fossa e può essere installato sul lato della porta di accesso alla fossa, sulla sinistra (85170023) o sulla destra (85170022) oppure sul lato opposto alla porta di accesso alla fossa installando l'apposita leva (85170024) ed utilizzando il gancio d'accosto (85170021). Nel caso in cui l'altezza della fossa sia compresa tra 300 e max 1500 mm occorre installare un pilastrino al di sotto del dispositivo.

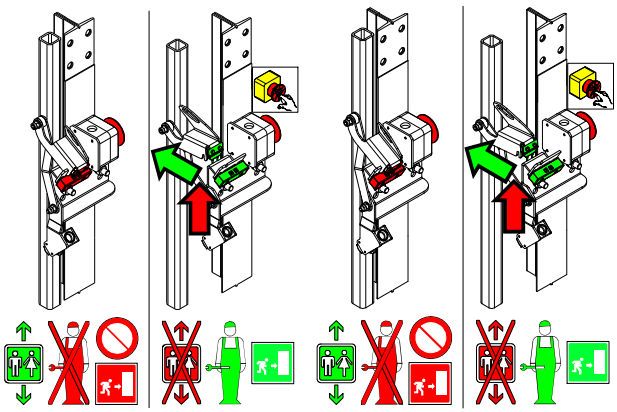

© 05.06.2013 – Rev.:05.06.2013.09.15 (J2)

8 DIMENSIONING OF TH SYSTEM

8.1 FLOW CALCULATION

In order to determine the system components it's necessary to calculate the Max suspended load [Tt]

1. The Max suspended load is given by the formula Tt = P + Q + Q + Pcd = Pc + Pa, where:
   - [PC] is the weight of the car (from the relevant table in function of finishes and dimensions)
   - [Q] is the rated load
   - [Pcd] is the weight of the car doors (in function of the number entrances, door type and door finishes)
   - [Pa] is the weight of the car frame (in function of the car dimensions)
2. Obtained the Max suspended load (Tt), knowing the travel length you can determine the following components:
   - Piston
   - Pump
   - Motor
   - Oil necessary amount
   - Tank
3. The standard distance between the anchoring brackets is 1500 mm and allows you to always use the guide T82; (for greater distances verify the feasibility in the table with the anchoring distances)
4. The type of bracket is determined according to the distance between the wall of the shaft and the axis of the guides [DAG]

8.1.1 CALCULATION OF THE MAX SUSPENDED LOAD

8.1.1.1 CALCULATION OF THE CAR WEIGHT - P_C

DIMENSIONS [MM]	800 x 800	800 x 1000	800 x 1200	800 x 1250	800 x 1300	850 x 1000	900 x 1000	900 x 1100	900 x 1200	900 x 1250	1000 x 1000	1000 x 1250	900 x 1400	1100 x 1250	1100 x 1300	1100 x 1400	1200 x 1250
WEIGHT [KG]																	
1 entrance	170	190	215	220	225	200	205	215	220	235	210	240	240	250	255	270	260
2 entrances	145	170	190	195	195	175	180	190	195	210	190	215	210	225	225	240	250
GLASS WALLS																	
½ short wall	16	16	16	16	16	17	18	18	18	18	20	20	18	22	22	22	24
½ long wall	16	20	22	23	24	20	20	21	22	23	20	23	24	23	24	24	23
1 short wall	30	30	30	30	30	32	34	34	34	34	38	38	34	40	40	40	42
1 long wall	30	38	42	45	48	38	38	40	42	45	38	45	50	45	48	50	48
MIRRORS																	
½ on short wall	9	9	9	9	9	10	11	11	11	11	13	13	11	15	15	15	17
½ on long wall	14	18	20	21	22	18	18	19	20	21	18	21	22	21	22	22	21
Full height on short wall	22	22	22	22	22	23	24	24	24	24	26	26	24	28	28	28	30
Full height on long wall	30	30	30	30	30	31	32	32	32	32	34	34	32	36	36	36	38
FLOORS																	
Marble 20 mm	32	40	48	48	52	42	44	48	54	56	50	62	64	68	72	76	76

8.1.1.2 RATED LOAD - Q

DIMENSIONS [MM]	800 x 800	800 x 1000	800 x 1200	800 x 1250	800 x 1300	850 x 1000	900 x 1000	900 x 1100	900 x 1200	900 x 1250	900 x 1400	1000 x 1000	1000 x 1250	1100 x 1250	1100 x 1300	1100 x 1400	1200 x 1250
LOAD [KG]	160	200															
	250																
		320															
				400				400									

8.1.1.3 CAR DOORS - P_{CD}

DIMENSIONS [MM]		800 x 800	800 x 1000	800 x 1200	800 x 1250	800 x 1300	850 x 1000	900 x 1000	900 x 1100	900 x 1200	900 x 1250	900 x 1400	1000 x 1000	1000 x 1250	1100 x 1250	1100 x 1300	1100 x 1400	1200 x 1250
OPENING																		
OPERATOR TELESCOPIC	700	32																
	750	34																
	800	36																
	850							38										
	900							40										
STD PANELS TELESCOPIC	700	32																
	750	33																
	800	35																
	850							40										
	900							42										
GLASS PANELS TELESCOPIC	700	40																
	750	42																
	800	45																
	850							48										
	900							50										
FOLDING DOORS	700	46																
	750	48																
	800	50																
	850							52										
	900							54										

8.1.1.4 CAR FRAME - P_A

DIMENSIONS [MM]	800 x 800	800 x 1000	800 x 1200	800 x 1250	800 x 1300	850 x 1000	900 x 1000	900 x 1100	900 x 1200	900 x 1250	900 x 1400	1000 x 1000	1000 x 1250	1100 x 1250	1100 x 1300	1100 x 1400	1200 x 1250
T501R	90																
T509		120															

© 05.06.2013 – Rev.:05.06.2013.09.15 (J2)

8.1.2 COMPONENTS SELECTION

8.1.2.1 COMPONENTS IN FUNCTION OF TRAVEL AND MAXIMUM SUSPENDED LOAD

TT	COMPONENT	TRAVEL [m]											
[KG]		3	4	5	6	7	8	9	10	11	12	13	14
590	JACK	70x5								80x5		80x7,5	
	PUMP	15L								20L			
	MOTOR	1,5											
	TOTAL FLUID	22,8	24,8	26,7	28,7	30,6	32,6	34,5	36,5	45,0	47,5	50,0	52,5
	TANK	HL										HL50	
640	JACK	70x5							80x5			80x7,5	
	PUMP	15L							20L				
	MOTOR	1,5											
	TOTAL FLUID	22,8	24,8	26,7	28,7	30,6	32,6	34,5	42,5	45,0	47,5	50	52,5
	TANK	HL										HL50	
690	JACK	70x5							80x5		80x7,5		90x5
	PUMP	15L							20L				23L
	MOTOR	1,5											
	TOTAL FLUID	22,8	24,8	26,7	28,7	30,6	32,6	34,5	42,5	45,0	47,5	50	63
	TANK	HL										HL50	
740	JACK	70x5			80x5						80x7,5	90x5	90x7,5
	PUMP	15L			20L							23L	
	MOTOR	1,5											
	TOTAL FLUID	22,8	24,8	26,7	32,5	35,0	37,5	40,0	42,5	45,0	47,5	59,8	63
	TANK	HL										HL50	
790	JACK	80x5									80x7,5	90x5	90x7,5
	PUMP	20L										23L	
	MOTOR	1,5											
	TOTAL FLUID	25,0	27,5	30,0	32,5	35,0	37,5	40,0	42,5	45,0	47,5	59,8	63
	TANK	HL										HL50	
840	JACK	80x5								80x7,5		90x5	90x7,5
	PUMP	20L										23L	
	MOTOR	1,5											
	TOTAL FLUID	25,0	27,5	30,0	32,5	35,0	37,5	40,0	42,5	45,0	47,5	59,8	63
	TANK	HL										HL50	
890	JACK	80x5								80x7,5		90x7.5	
	PUMP	20L										23L	
	MOTOR	1,5											
	TOTAL FLUID	25,0	27,5	30,0	32,5	35,0	37,5	40,0	42,5	45,0	47,5	59,8	63
	TANK	HL										HL50	
940	JACK	80x5							90x5			90x7.5	
	PUMP	20L							23L				
	MOTOR	1,5											
	TOTAL FLUID	25	27,5	30	32,5	35	37,5	40	50,2	53,4	56,6	59,8	63
	TANK	HL							HL50				

© 05.06.2013 – Rev.:05.06.2013.09.15 (J2)

TT [KG]	COMPONENT	TRAVEL [m] 3	4	5	6	7	8	9	10	11	12	13	14
990	JACK	90x5										90x7.5	
	PUMP	23L											
	MOTOR	1,5											
	TOTAL FLUID	27,8	31,0	34,2	37,4	40,4	43,8	47	50,2	53,4	56,6	59,8	63
	TANK	HL							HL50				
1040	JACK	90x5									90x7.5		90x12
	PUMP	23L											
	MOTOR	1,5											
	TOTAL FLUID	27,8	31,0	34,2	37,4	40,4	43,8	47	50,2	53,4	56,6	59,8	63
	TANK	HL							HL50				
1090	JACK	90x5									90x7.5		90x12
	PUMP	23L											
	MOTOR	1,5									2,2		
	TOTAL FLUID	27,8	31,0	34,2	37,4	40,4	43,8	47	50,2	53,4	56,6	59,8	63
	TANK	HL							HL50				
1140	JACK	90x5									90x7.5		90x12
	PUMP	23L											
	MOTOR	2,2											
	TOTAL FLUID	27,8	31,0	34,2	37,4	40,4	43,8	47	50,2	53,4	56,6	59,8	63
	TANK	HL							HL50				

© 05.06.2013 – Rev.:05.06.2013.09.15 (J2)

8.1.3 FIXING MAXIMUM DISTANCES

8.1.3.1 GUIDES T82/B

DIMENSIONS [MM]	800 x 800	800 x 1000	800 x 1200	800 x 1250	800 x 1300	850 x 1000	900 x 1000	900 x 1100	900 x 1200	900 x 1250	900 x 1400	1000 x 1000	1000 x 1250	1100 x 1250	1100 x 1300	1100 x 1400	1200 x 1250
TT [KG]																	
590	2800	2800	2700	2700	2600	2700	2700	2800	2300	2600	2300	2600	2400				
640		2700	2600	2600	2600	2700	2600	2700	2300	2600	2300	2600	2400	2100	2100	2000	2000
690		2700	2500	2500	2500	2700	2600	2700	2200	2500	2200	2500	2300	2000	2000	2000	2000
740		2600	2500	2500	2500	2600	2500	2500	2200	2500	2200	2400	2300	2000	2000	2000	1900
790		2600	2500	2500	2500	2500	2500	2500	2100	2500	2100	2300	2200	1900	1900	1900	1900
840		2500	2400	2400	2400	2400	2400	2400	2100	2400	2100	2200	2100	1800	1800	1800	1800
890			2400	2400	2400	2300	2400		2000	2400	2000	2100	2100	1800	1800	1800	1800
940					2100				1900	2100	1900	2000		1700	1700	1700	1700
990					2000				1800	2000	1800	1900		1600	1600	1600	1600
1040										1900				1500	1500	1600	1600
1090																1500	1500
1140																	1500

8.1.3.2 GUIDES T90/B

DIMENSIONS [MM]	800 x 800	800 x 1000	800 x 1200	800 x 1250	800 x 1300	850 x 1000	900 x 1000	900 x 1100	900 x 1200	900 x 1250	900 x 1400	1000 x 1000	1000 x 1250	1100 x 1250	1100 x 1300	1100 x 1400	1200 x 1250
TT [KG]																	
590		3300	3200	3200	3200	3300	3300	3300	3100	3100	3100	3100	3100				
640		3300	3200	3200	3200	3300	3200	3300	3000	3100	3000	3100	3000	3000	2900	2800	2700
690		3200	3100	3100	3100	3200	3100	3200	2900	3100	2900	3100	2900	2900	2800	2800	2600
740		3200	3100	3100	3100	3200	3100	3100	2900	3000	2900	3000	2900	2800	2800	2800	2600
790		3200	3100	3100	3100	3200	3100	3100	2900	3000	2900	3000	2900	2800	2800	2800	2600
840		3100	3000	3000	3000	3100	3000	3000	2800	3000	2800	3000	2800	2700	2700	2700	2500
890			2900	2900	2900	3000	2900		2800	2900	2800	2900	2800	2600	2600	2600	2400
940					2800				2700	2800	2700	2800		2500	2500	2500	2400
990					2700				2700	2700	2700	2700		2400	2400	2400	2300
1040										2600				2300	2400	2300	2200
1090																2300	2200
1140																	2200

© 05.06.2013 – Rev.:05.06.2013.09.15 (J2)

© 05.06.2013 – Rev.:05.06.2013.09.15 (J2)

9 SHAFT LAYOUT - MINIMUM DIMENSIONS

9.1 SYSTEMS WITH 1 ENTRANCE

9.1.1 DOORS 2AT IN CAR AND AT LANDINGS

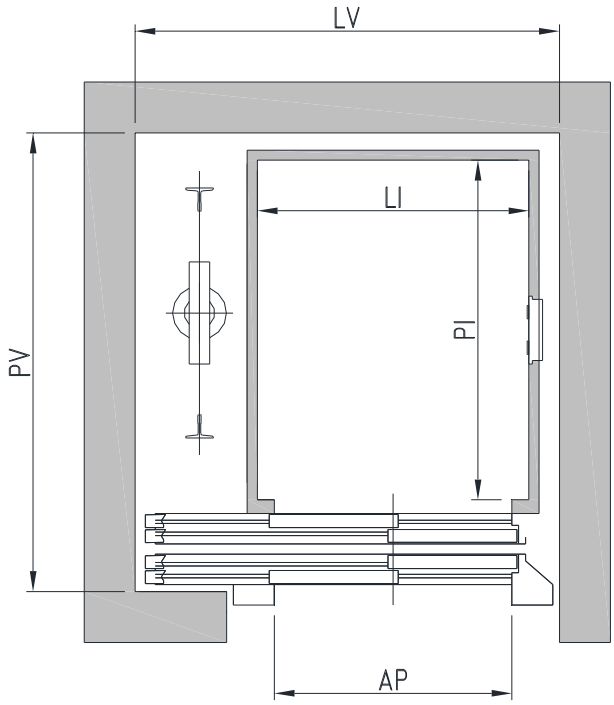

LI	PI	AP	LV	PV*
800	800	700	1250	1150
800	1000	700	1250	1350
800	1200	750	1330	1550
800	1250	750	1330	1600
800	1300	750	1330	1650
850	1000	750	1330	1350
900	1000	800	1400	1350
900	1100	800	1400	1450
900	1200	800	1400	1550
900	1400	800	1400	1750
900	1250	800	1400	1600
1000	1000	800	1450	1350
1000	1250	800	1450	1600
1100	1250	800 / 900	1550	1600
1100	1300	800 / 900	1550	1650
1100	1400	800 / 900	1550	1750
1200	1250	800 / 900	1650	1600

Dimensions with standard sills. With reduced sills PV=PV- 40 mm

© 05.06.2013 – Rev.:05.06.2013.09.15 (J2)

9.1.2 DOORS 3AT IN CAR AND AT LANDINGS

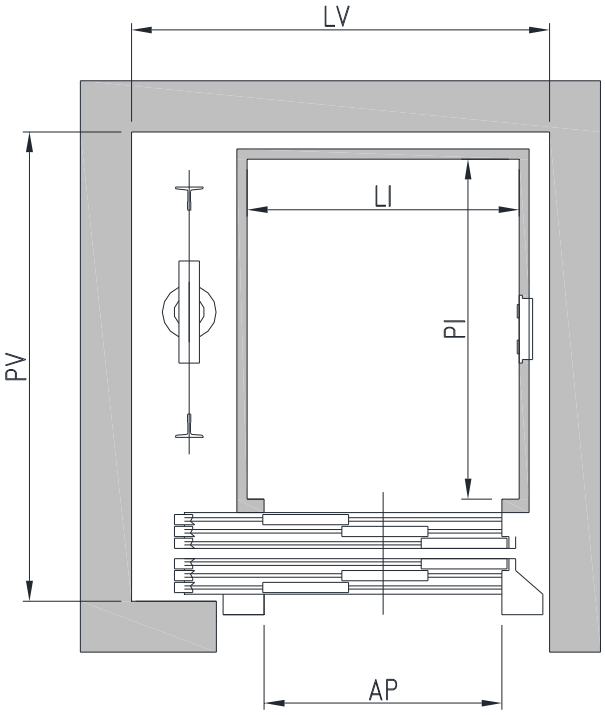

LI	PI	AP	LV	PV*
800	800	700	1200	1180
800	1000	700	1230	1380
800	1200	750	1255	1580
800	1250	750	1255	1630
800	1300	750	1255	1680
850	1000	750	1280	1380
900	1000	800	1330	1380
900	1100	800	1330	1480
900	1200	800	1330	1580
900	1250	800	1330	1630
900	1400	800	1330	1780
1000	1000	800	1430	1380
1000	1250	800	1430	1630
1100	1250	800 / 900	1530	1630
1100	1300	800 / 900	1530	1680
1100	1400	800 / 900	1530	1780
1200	1250	800 / 900	1630	1630

© 05.06.2013 – Rev.:05.06.2013.09.15 (J2)

9.1.3 DOORS 2AO IN CAR AND AT LANDINGS

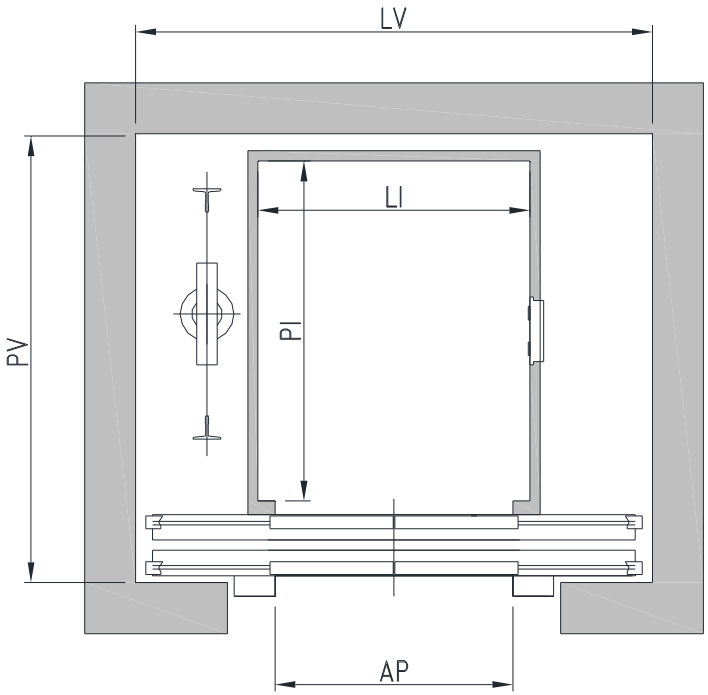

LI	PI	AP	LV	PV*
800	800	700	1520	1120
800	1000	700	1520	1320
800	1200	750	1630	1520
800	1250	750	1630	1570
800	1300	750	1630	1620
850	1000	750	1630	1320
900	1000	800	1720	1320
900	1100	800	1720	1420
900	1200	800	1720	1520
900	1250	800	1720	1570
900	1400	800	1720	1720
1000	1000	800	1720	1320
1000	1250	800	1720	1570
1100	1250	800 / 900	1750 / 1920	1570
1100	1300	800 / 900	1750 / 1920	1620
1100	1400	800 / 900	1750 / 1920	1720
1200	1250	800 / 900	1750 / 1920	1570

Dimensions with standard sills. With reduced sills PV=PV- 40 mm

© 05.06.2013 – Rev.:05.06.2013.09.15 (J2)

9.1.4 FOLDING DOORS IN CAR AND HINGHED DOORS AT LANDINGS

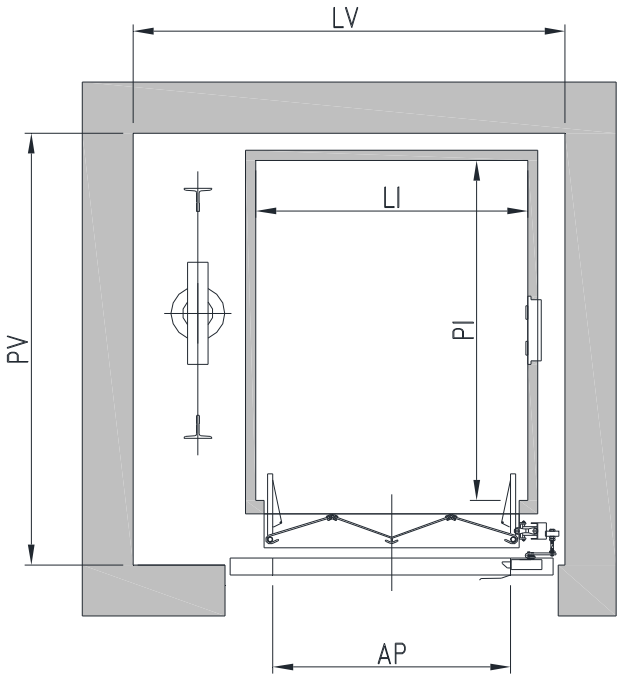

LI	PI	AP	LV	PV
800	800	700	1220	1070
800	1000	700	1250	1270
800	1200	750	1280	1430
800	1250	750	1280	1480
800	1300	750	1280	1530
850	1000	750	1300	1270
900	1000	800	1350	1270
900	1100	800	1350	1370
900	1200	800	1350	1470
900	1400	800	1350	1670
900	1250	800	1350	1520
1000	1000	800	1420	1270
1000	1250	800	1420	1520
1100	1250	800 / 900	1520	1520
1100	1300	800 / 900	1520	1570
1100	1400	800 / 900	1520	1670
1200	1250	800 / 900	1620	1520

© 05.06.2013 – Rev.:05.06.2013.09.15 (J2)

9.1.5 NO DOORS IN CAR AND HINGHED DOORS AT LANDINGS

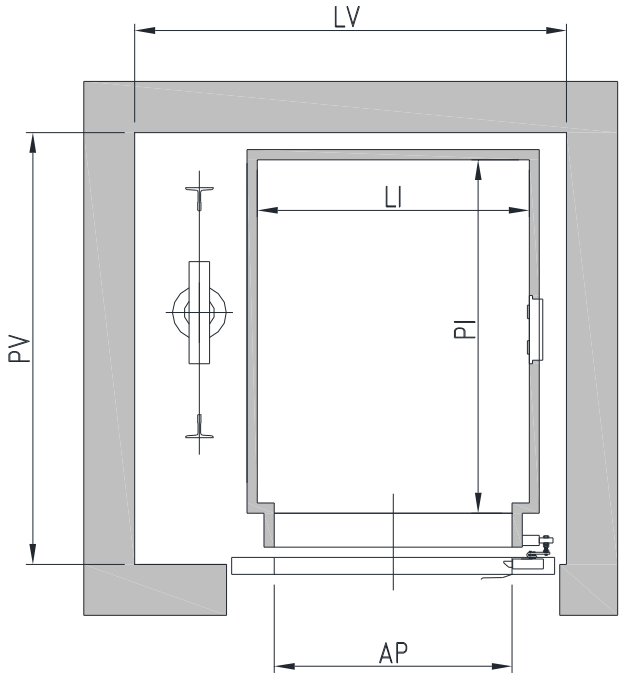

LI	PI	AP	LV	PV
800	800	700	1220	1010
800	1000	700	1250	1210
800	1200	750	1280	1410
800	1250	750	1280	1460
800	1300	750	1280	1510
850	1000	750	1300	1210
900	1000	800	1350	1210
900	1100	800	1350	1310
900	1200	800	1350	1410
900	1400	800	1350	1610
900	1250	800	1350	1460
1000	1000	800	1420	1210
1000	1250	800	1420	1460
1100	1250	800 / 900	1520	1460
1100	1300	800 / 900	1520	1510
1100	1400	800 / 900	1520	1610
1200	1250	800 / 900	1620	1460

© 05.06.2013 – Rev.:05.06.2013.09.15 (J2)

9.2 SYSTEMS WITH 2 ENTRANCES 180°

9.2.1 DOORS 2AT IN CAR AND AT LANDINGS

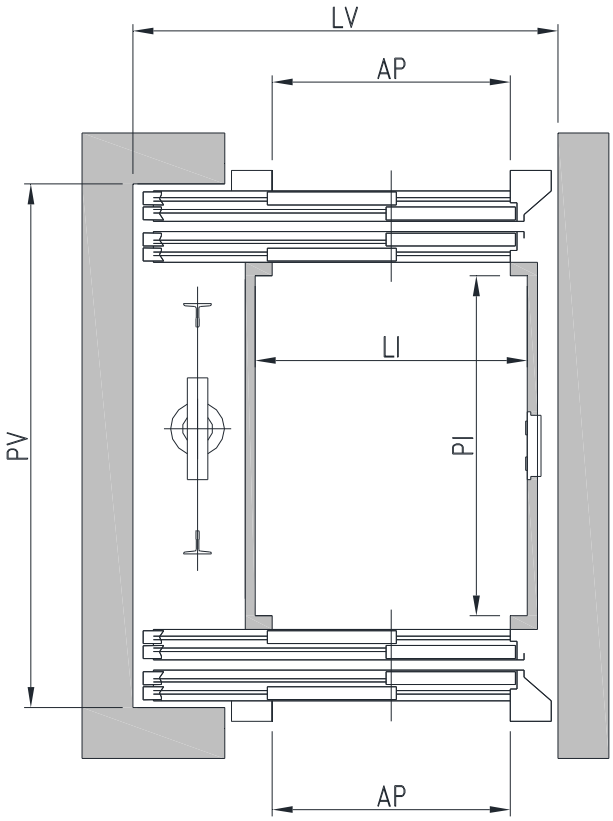

LI	PI	AP	LV	PV*
800	800	700	1250	1340
800	1000	700	1250	1540
800	1200	750	1330	1740
800	1250	750	1330	1790
800	1300	750	1330	1840
850	1000	750	1330	1540
900	1000	800	1400	1540
900	1100	800	1400	1640
900	1200	800	1400	1740
900	1250	800	1400	1790
900	1400	800	1400	1940
1000	1000	800	1450	1540
1000	1250	800	1450	1790
1100	1250	800 / 900	1550	1790
1100	1300	800 / 900	1550	1840
1100	1400	800 / 900	1550	1940
1200	1250	800 / 900	1650	1790

Dimensions with standard sills. With reduced sills on both entrances PV=PV- 80 mm

© 05.06.2013 – Rev.:05.06.2013.09.15 (J2)

9.2.2 DOORS 3AT IN CAR AND AT LANDINGS

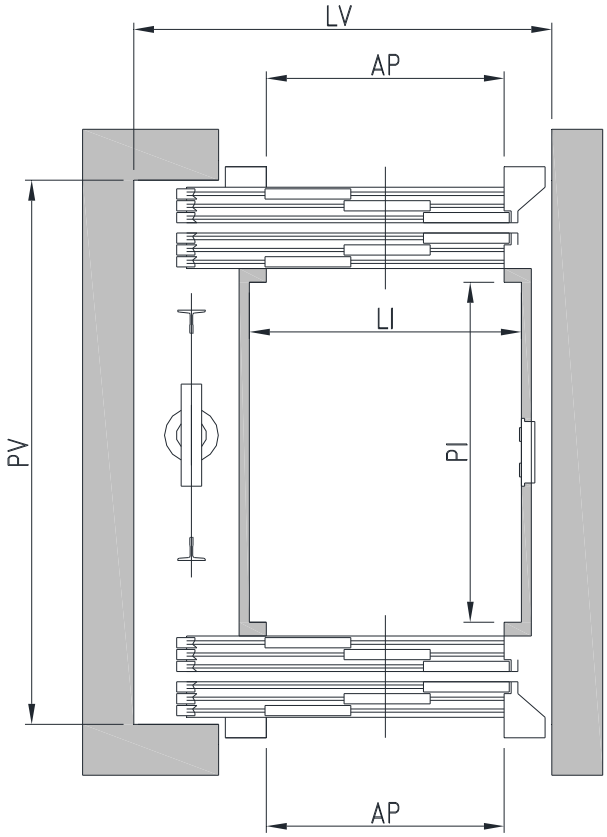

LI	PI	AP	LV	PV
800	800	700	1200	1400
800	1000	700	1230	1600
800	1200	750	1255	1800
800	1250	750	1255	1850
800	1300	750	1255	1900
850	1000	750	1280	1600
900	1000	800	1330	1600
900	1100	800	1330	1700
900	1200	800	1330	1800
900	1250	800	1330	1850
900	1400	800	1330	2000
1000	1000	800	1430	1600
1000	1250	800	1430	1850
1100	1250	800 / 900	1530	1850
1100	1300	800 / 900	1530	1900
1100	1400	800 / 900	1530	2000
1200	1250	800 / 900	1630	1850

© 05.06.2013 – Rev.:05.06.2013.09.15 (J2)

9.2.3 DOORS 2AO IN CAR AND AT LANDINGS

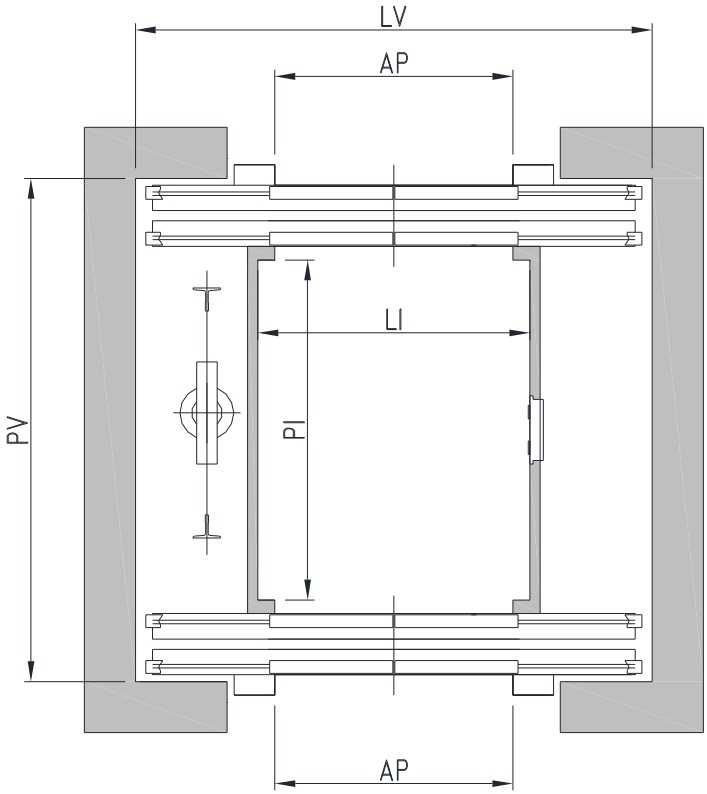

LI	PI	AP	LV	PV*
800	800	700	1520	1280
800	1000	700	1520	1480
800	1200	750	1630	1680
800	1250	750	1630	1730
800	1300	750	1630	1780
850	1000	750	1630	1480
900	1000	800	1720	1480
900	1100	800	1720	1580
900	1200	800	1720	1680
900	1250	800	1720	1730
900	1400	800	1720	1880
1000	1000	800	1720	1480
1000	1250	800	1720	1730
1100	1250	800 / 900	1750 / 1920	1730
1100	1300	800 / 900	1750 / 1920	1780
1100	1400	800 / 900	1750 / 1920	1880
1200	1250	800 / 900	1750 / 1920	1730

Dimensions with standard sills. With reduced sills on both entrances PV=PV- 80 mm

© 05.06.2013 – Rev.:05.06.2013.09.15 (J2)

9.2.4 FOLDING DOORS IN CAR AND HINGHED DOORS AT LANDINGS

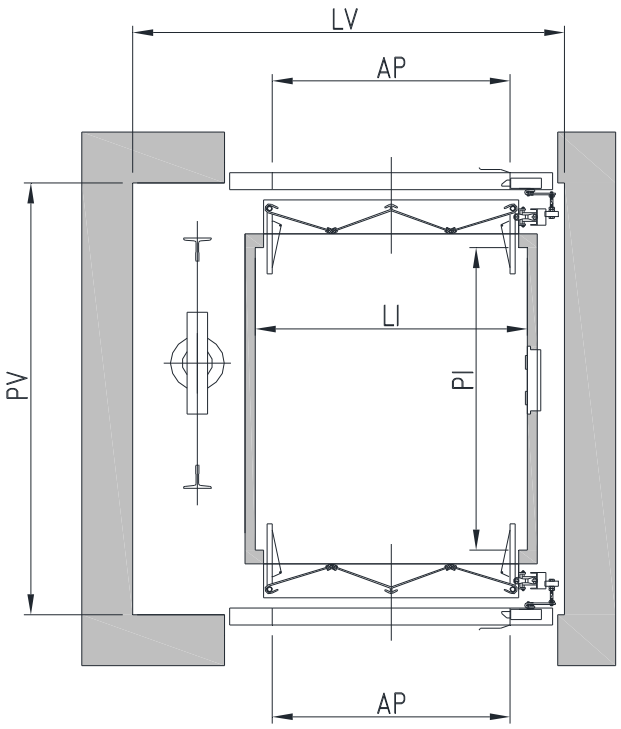

LI	PI	AP	LV	PV
800	800	700	1220	1180
800	1000	700	1250	1380
800	1200	750	1280	1580
800	1250	750	1280	1630
800	1300	750	1280	1680
850	1000	750	1300	1380
900	1000	800	1350	1380
900	1100	800	1350	1480
900	1200	800	1350	1580
900	1250	800	1350	1630
900	1400	800	1350	1780
1000	1000	800	1420	1380
1000	1250	800	1420	1630
1100	1250	800 / 900	1520	1630
1100	1300	800 / 900	1520	1680
1100	1400	800 / 900	1520	1780
1200	1250	800 / 900	1620	1630

© 05.06.2013 – Rev.:05.06.2013.09.15 (J2)

9.2.5 NO DOORS IN CAR AND HINGHED DOORS AT LANDINGS

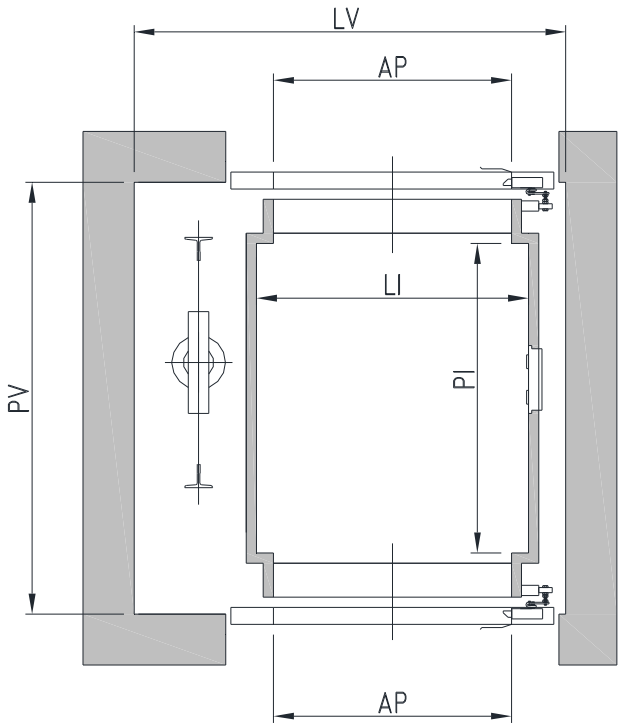

LI	PI	AP	LV	PV
800	800	700	1220	1060
800	1000	700	1250	1260
800	1200	750	1280	1460
800	1250	750	1280	1510
800	1300	750	1280	1560
850	1000	750	1300	1260
900	1000	800	1350	1260
900	1100	800	1350	1360
900	1200	800	1350	1460
900	1250	800	1350	1510
900	1400	800	1350	1660
1000	1000	800	1420	1260
1000	1250	800	1420	1510
1100	1250	800/900	1520	1510
1100	1300	800/900	1520	1560
1100	1400	800/900	1520	1660
1200	1250	800/900	1620	1510

© 05.06.2013 – Rev.:05.06.2013.09.15 (J2)

9.3 SYSTEMS WITH 2 ENTRANCE 90°

9.3.1 DOORS 2AT IN CAR AND AT LANDINGS

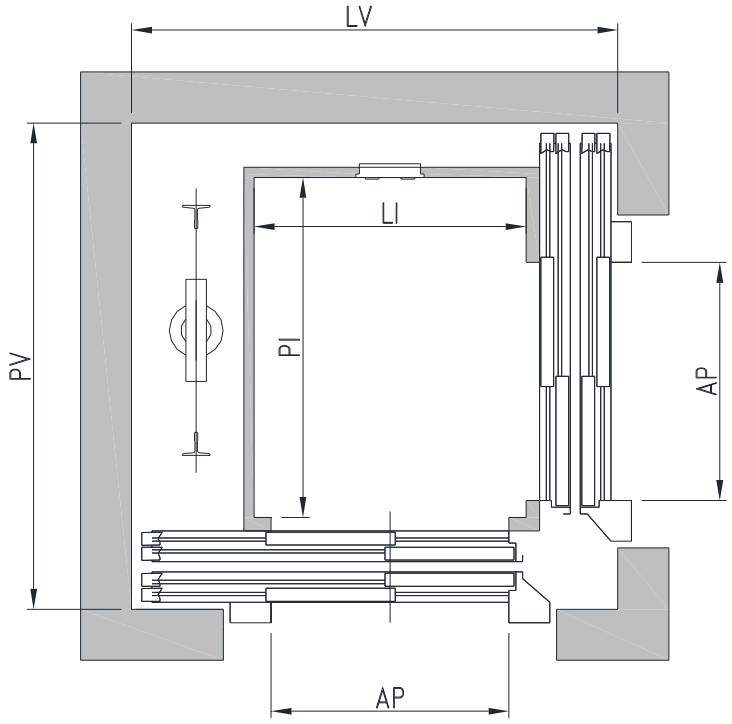

LI	PI	AP	LV*	PV*
800	800	700	1430	1430
800	1000	700	1430	1430
800	1200	750	1550	1480
800	1250	750	1600	1480
800	1300	750	1650	1480
850	1000	750	1480	1500
900	1000	800	1550	1580
900	1100	800	1550	1580
900	1200	800	1550	1580
900	1250	800	1600	1550
900	1400	800	1550	1750
1000	1000	800	1610	1580
1000	1250	800	1610	1600
1100	1250	800 / 900	1710 / 1730	1600 / 1730
1100	1300	800 / 900	1710 / 1730	1650 / 1730
1100	1400	800 / 900	1710 / 1730	1750 / 1750
1200	1250	800 / 900	1810	1600 / 1730

Dimensions with standard sills. With reduced sills LV=LV-40 and PV=PV*- 40 mm

© 05.06.2013 – Rev.:05.06.2013.09.15 (J2)

9.3.2 FOLDING DOORS IN CAR AND HINGHED DOORS AT LANDINGS

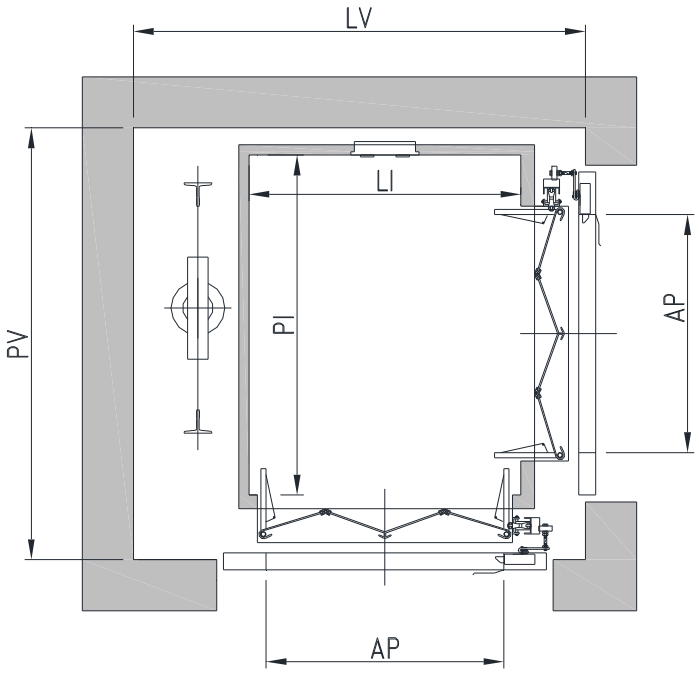

LI	PI	AP	LV	PV
800	800	700	1295	1100
800	1000	700	1330	1270
800	1200	750	1330	1430
800	1250	750	1330	1480
800	1300	750	1330	1530
850	1000	750	1380	1270
900	1000	800	1430	1270
900	1100	800	1430	1370
900	1200	800	1470	1470
900	1250	800	1430	1520
900	1400	800	1430	1670
1000	1000	800	1530	1280
1000	1250	800	1530	1520
1100	1250	800 / 900	1630	1520
1100	1300	800 / 900	1630	1570
1100	1400	800 / 900	1630	1670
1200	1250	800 / 900	1730	1520

© 05.06.2013 – Rev.:05.06.2013.09.15 (J2)

9.3.3 NO DOORS IN CAR AND HINGHED DOORS AT LANDINGS

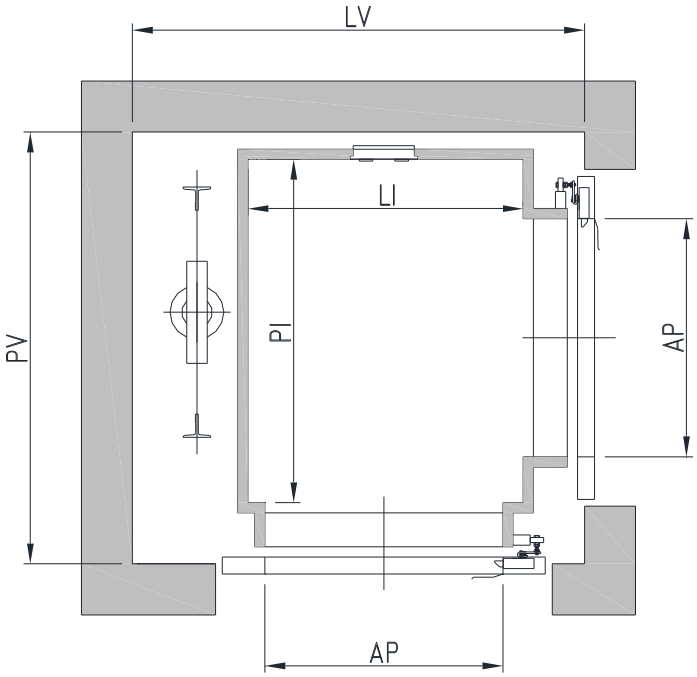

LI	PI	AP	LV	PV
800	800	700	1235	1040
800	1000	700	1270	1210
800	1200	750	1270	1410
800	1250	750	1270	1460
800	1300	750	1310	1510
850	1000	750	1320	1210
900	1000	800	1370	1210
900	1100	800	1370	1310
900	1200	800	1410	1410
900	1250	800	1370	1460
900	1400	800	1370	1610
1000	1000	800	1470	1220
1000	1250	800	1470	1460
1100	1250	800 / 900	1570	1460
1100	1300	800 / 900	1570	1510
1100	1400	800 / 900	1570	1610
1200	1250	800 / 900	1670	1460

© 05.06.2013 – Rev.:05.06.2013.09.15 (J2)

9.4 SYSTEMS WITH 1 ENTRANCE AND MECHANICAL PART ON REAR

9.4.1 DOORS 2AT IN CAR AND AT LANDINGS

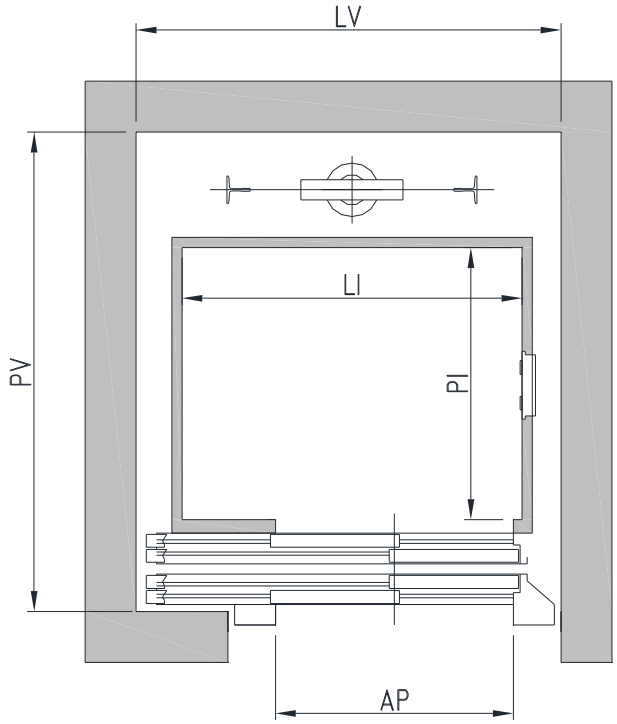

LI	PI	AP	LV	PV*
800	800	700	1250	1410
1000	800	700	1250	1410
1200	800	750	1400	1410
1250	800	750	1420	1410
1300	800	750	1470	1410
1000	850	750	1325	1460
1000	900	800	1400	1510
1100	900	800	1400	1510
1200	900	800	1400	1510
1250	900	800	1420	1510
1400	900	800	1600	1510
1000	1000	800	1400	1610
1250	1000	800	1420	1610
1250	1100	800 / 900	1420 / 1550	1710
1300	1100	800 / 900	1470 / 1550	1710
1400	1100	800 / 900	1600	1710
1250	1200	800 / 900	1420 / 1550	1810

Dimensions with standard sills. With reduced sills PV=PV- 40 mm

© 05.06.2013 – Rev.:05.06.2013.09.15 (J2)

9.4.2 FOLDING DOORS IN CAR AND HINGHED DOORS AT LANDINGS

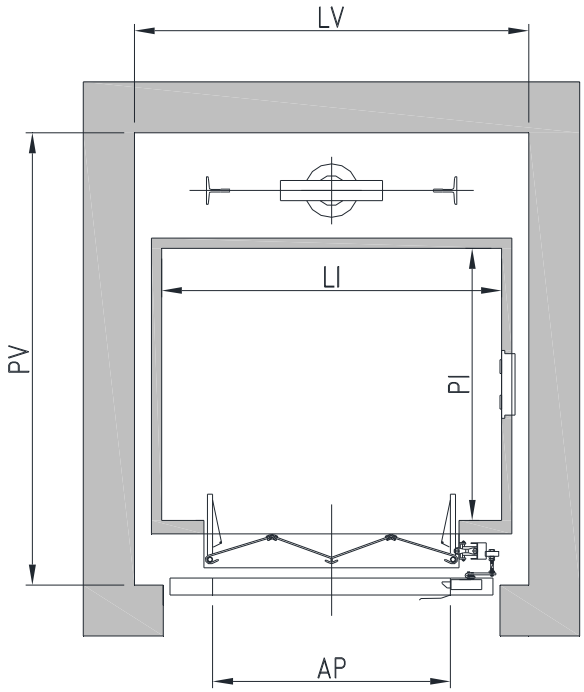

LI	PI	AP	LV	PV
800	800	700	1030	1295
1000	800	700	1160	1330
1200	800	750	1360	1330
1250	800	750	1410	1330
1300	800	750	1460	1330
1000	850	750	1160	1380
1000	900	800	1160	1430
1100	900	800	1260	1510
1200	900	800	1360	1430
1250	900	800	1410	1430
1400	900	800	1560	1430
1000	1000	800	1160	1530
1250	1000	800	1410	1530
1250	1100	800 / 900	1410	1630
1300	1100	800 / 900	1460	1630
1400	1100	800 / 900	1560	1630
1250	1200	800 / 900	1410	1730

© 05.06.2013 – Rev.:05.06.2013.09.15 (J2)

9.4.3 NO DOORS IN CAR AND HINGHED DOORS AT LANDINGS

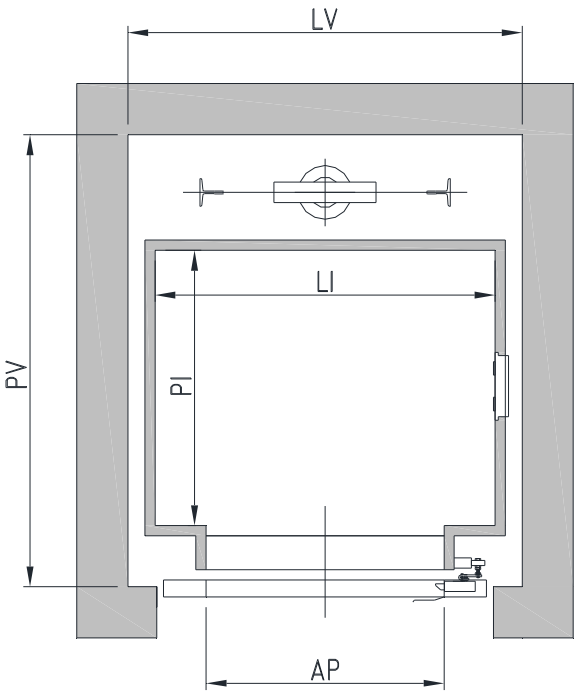

LI	PI	AP	LV	PV
800	800	700	1030	1235
1000	800	700	1160	1270
1200	800	750	1360	1270
1250	800	750	1410	1270
1300	800	750	1460	1270
1000	850	750	1160	1320
1000	900	800	1160	1370
1100	900	800	1260	1370
1200	900	800	1360	1370
1250	900	800	1410	1370
1400	900	800	1560	1370
1000	1000	800	1160	1470
1250	1000	800	1410	1470
1250	1100	800/900	1410	1570
1300	1100	800/900	1460	1570
1400	1100	800/900	1560	1570
1250	1200	800/900	1410	1670

© 05.06.2013 – Rev.:05.06.2013.09.15 (J2)

APPARECCHIATURE FLUIDODINAMICHE
E COMPONENTI PER ASCENSORI

GMV SPA

VIA DON GNOCCHI, 10 - 20016 PERO – MILANO (ITALY)
TEL. +39 02 33930.1 - FAX +39 02 3390379
HTTP://WWW.GMV.IT - E-MAIL: INFO@GMV.IT

Azienda
CERTIFICATA
UNI EN ISO 9001

Doc. n° 1 0991 496 Rev. 1.03 - 05.06.2013 File: CT-HLDM-10991496EN-103.doc (J2)